ARMY FM 10-575

AIR FORCE TO 13C7-17-11

FM 10-575 C2 ONLY

AIRDROP OF SUPPLIES AND EQUIPMENT:

RIGGING 613WD WATER DISTRIBUTORS

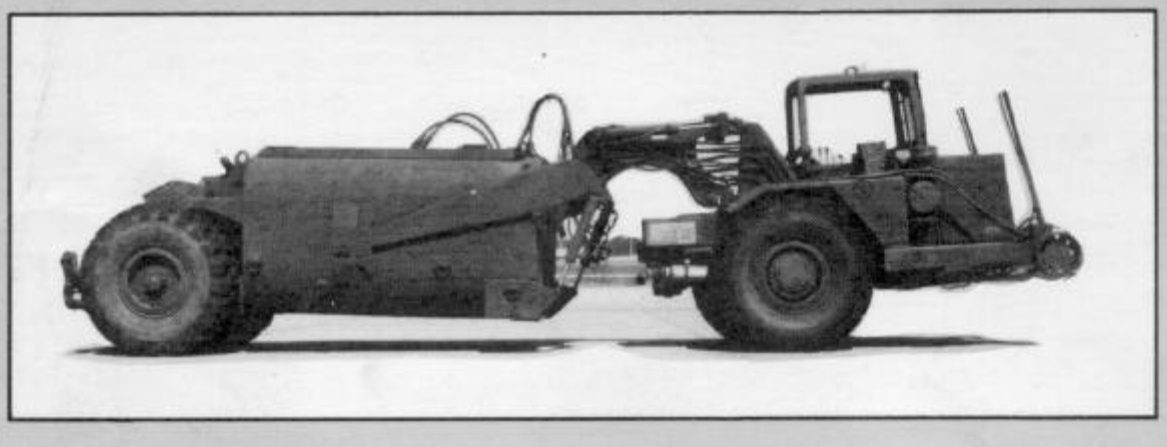

FM 10-575 C2 ONLY

DEPARTMENTS OF THE ARMY AND THE AIR FORCE

FM 10–575 / TO 13C7–17–11

FIELD MANUAL
NO 10–575
TECHNICAL ORDER
NO 13C7–17–11

HEADQUARTERS
DEPARTMENTS OF THE ARMY
AND THE AIR FORCE
Washington, DC, 4 May 1987

AIRDROP OF SUPPLIES AND EQUIPMENT:

RIGGING 613WD WATER DISTRIBUTORS

TABLE OF CONTENTS

		Paragraph	Page
PREFACE			iii
CHAPTER 1	**INTRODUCTION**		
	Description of Items	1-1	1-1
	Special Considerations	1-2	1-2
CHAPTER 2	**RIGGING 613WD WATER DISTRIBUTORS ON TYPE II PLATFORMS FOR LOW-VELOCITY AIRDROP**		
	TYPE II PROCEDURES REMOVED	2-1	2-1
		2-2	2-1
		2-3	2-1
		2-4	2-17
		2-5	2-26
		2-6	2-27
		2-7	2-30
		2-8	2-31
		2-9	2-33
		2-10	2-35
		2-11	2-43
		2-12	2-45
		2-13	2-46
		2-14	2-46
		2-15	2-47

DISTRIBUTION RESTRICTION: Approved for public release; distribution is unlimited.

		Paragraph	Page
CHAPTER 3	RIGGING 613WD WATER DISTRIBUTORS ON TYPE V PLATFORMS		
Section I	LOW-VELOCITY AIRDROP		
	Description of Load	3-1	3-1
	Preparing Platform	3-2	3-1
	Preparing and Positioning Load Spreaders and Honeycomb Stacks	3-3	3-4
	Preparing Vehicle	3-4	3-18
	Installing Lifting Slings and Positioning Vehicle	3-5	3-30
	Lashing Vehicle	3-6	3-32
	Installing Suspension Slings	3-7	3-36
	Safetying Suspension Slings	3-8	3-37
	Installing Parachute Release Stowage Platform	3-9	3-39
	Stowing Cargo Parachutes	3-10	3-42
	Installing Extraction System	3-11	3-50
	Installing Parachute Release Assembly	3-12	3-52
	Placing Extraction Parachutes	3-13	3-53
	Installing Provisions for Emergency Restraints	3-14	3-53
	Marking Rigged Load	3-15	3-54
	Equipment Required	3-16	3-54
Section II	LAPE AIRDROP		
	REMOVED: 1995 MESSAGE TERMINATION OF LAPES	3-17	3-59
		3-18	3-59
		3-19	3-61
		3-20	3-65
		3-21	3-65
		3-22	3-67
		3-23	3-71
		3-24	3-80
		3-25	3-80
		3-26	3-80

GLOSSARY Glossary-1

REFERENCES References-1

PREFACE

SCOPE

This manual tells and shows how to rig the 613 water distributors (types I and II) for low-velocity airdrop from C-130 or C-141 aircraft and LAPE airdrop from a C-130 aircraft. This manual is designed for use by all parachute riggers.

USER INFORMATION

The proponent of this publication is HQ TRADOC. You are encouraged to report any errors or omissions and suggest ways for improving this manual. Army personnel, send your comments on DA Form 2028 (Recommended Changes to Publications and Blank Forms) directly to:

Commander
US Army Quartermaster Center and School
ATTN: ATSM-DTP
Fort Lee, Virginia 23801-5036

Air Force personnel, send your reports on AFTO Form 22 (Technical Order Publication Improvement Report) through:

Headquarters
Military Airlift Command
(MAC/DOXT)
Scott AFB, Illinois 62225-5001

to:

Commander
US Army Quartermaster Center and School
ATTN: ATSM-DTP
Fort Lee, Virginia 23801-5003

Also send information copies of AFTO Form 22 to:

San Antonio ALC/MMILRA
Kelly AFB, Texas 78241-5000

Chapter 3

RIGGING 613WD WATER DISTRIBUTORS ON TYPE V PLATFORMS

Section I

LOW-VELOCITY AIRDROP

3-1. Description of Load

The 613WD water distributors (types I and II) are rigged on a 32-foot, type V airdrop platform for low-velocity airdrop from C-130 or C-141 aircraft. The water distributor is rigged with eight G-11C cargo parachutes and other items of airdrop equipment including a modified M-2 release. Types I and II water distributors are rigged the same, except where noted.

CAUTION

These loads may be airdropped from C-141 aircraft only if the rigged weight is 38,500 pounds or less.

3-2. Preparing Platform

Prepare a 32-foot, type V airdrop platform as described below.

a. Inspecting Platform. Inspect, or assemble and inspect, the platform as outlined in TM 10-1670-268-20&P/TO 13C7-52-22.

CAUTION

The 32-foot, type V airdrop platform must be modified as shown in Figure 3-1.

b. Installing Tandem Links. Install a tandem link on the front of each platform side rail as shown in Figure 3-1.

c. Attaching and Numbering Clevises. Attach and number 64 tiedown clevises as shown in Figure 3-1.

Notes

1. *The nose bumper may or may not be installed.*
2. *Measurements given in this section are from the front edge of the platform, NOT from the front edge of the nose bumper.*

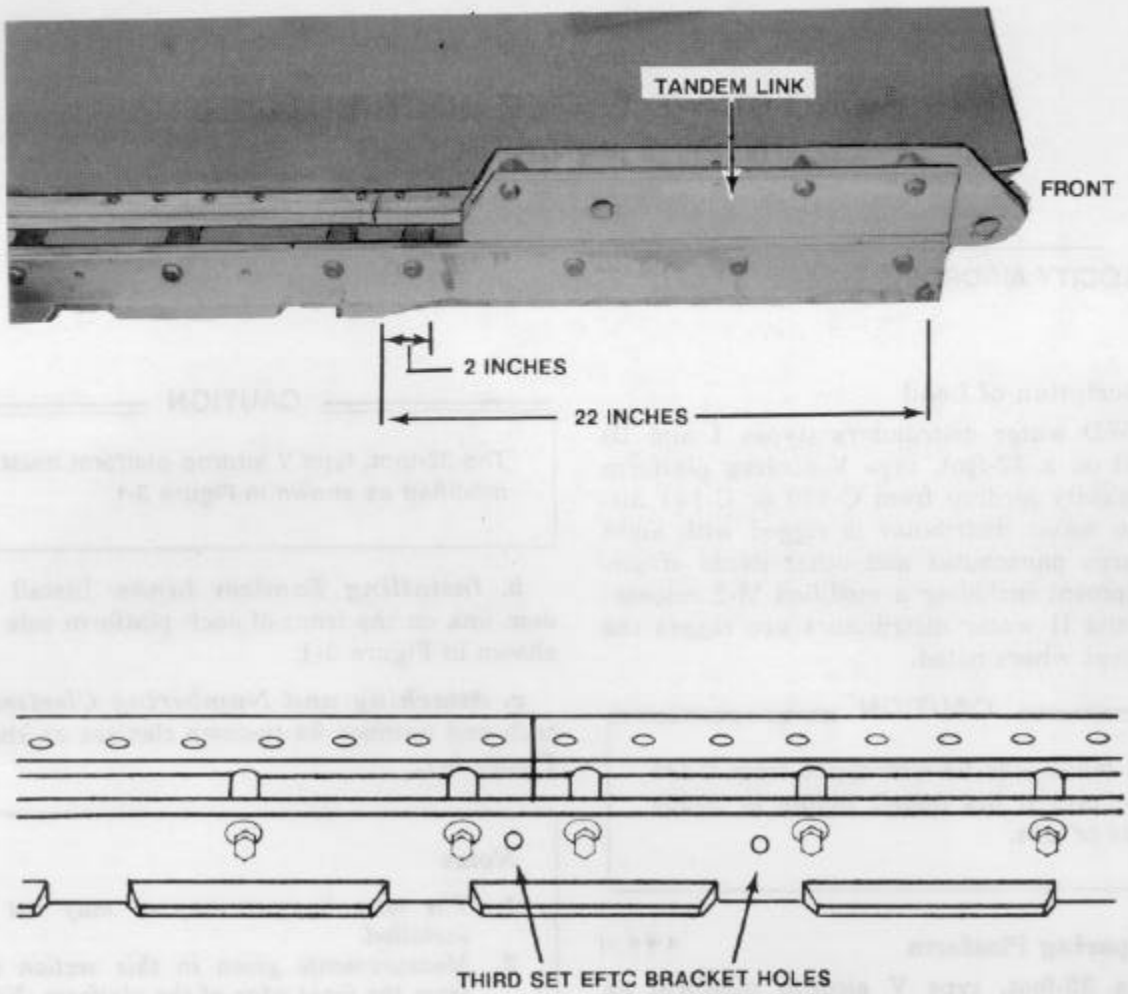

Note

Make the modifications shown in steps 1 and 2 if the manufacturer has not modified the platform side rails.

Step:

1. Cut off the indent locks 22 inches from the front of the platform, even with the platform side rails. Taper the cut 2 inches to the edge of the third indent lock.
2. Drill a third set of EFTC bracket holes in the left platform side rail. Drill the first hole 120 inches on center from the front end of the rail and 1 1/4 inches on center from the top of the rail. Drill the second hole 7 1/4 inches on center from the first hole and 1 1/4 inches from the top of the rail.
3. Install a tandem link on the front of each platform side rail using holes 1, 2, and 3.

Figure 3-1. Platform prepared

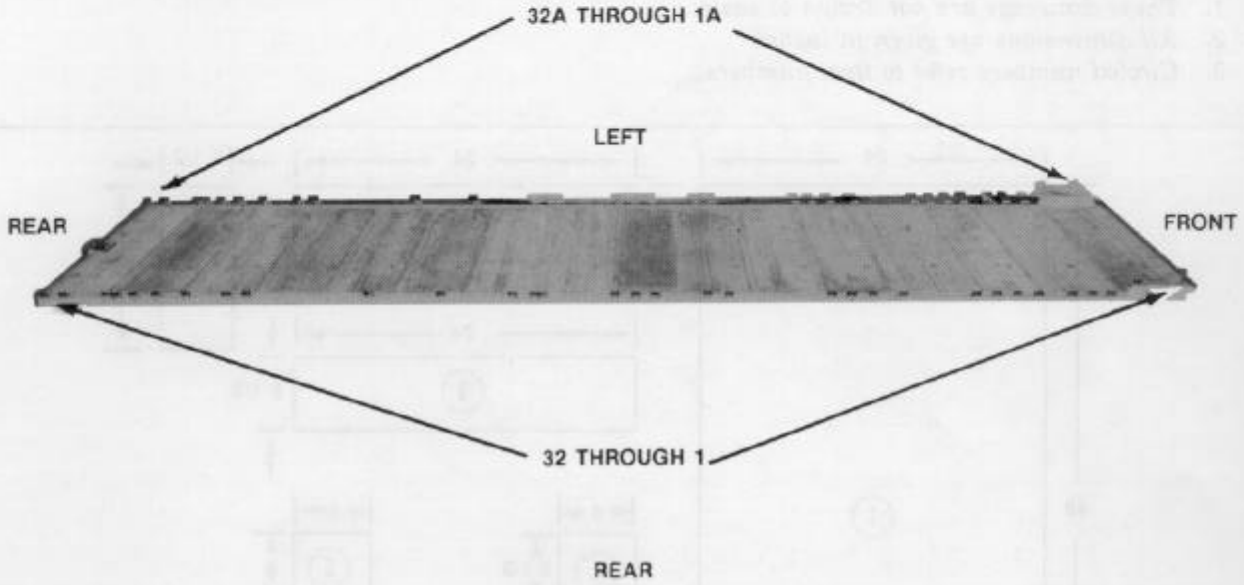

4. Install a clevis on bushings 1 and 4 on each tandem link.
5. Starting at the front of each platform side rail, install clevises on each platform side rail using the bushings bolted on holes 5, 6, 7, 9, 10, 11, 12, 16, 18, 19, 20, 26, 27, 30, 31, 32, 36, 37, 38, 42, 46, 53, 54, 56, 58, 59, 60, 61, 63, and 64.
6. Starting at the front of the platform, number the clevises bolted to the right side from 1 through 32 and those bolted to the left side from 1A through 32A.

Figure 3-1. Platform prepared (continued)

3-3. Preparing and Positioning Load Spreaders and Honeycomb Stacks

Prepare and position load spreaders and honeycomb stacks as shown in Figures 3-2 through 3-15.

Notes

1. *These drawings are not drawn to scale.*
2. *All dimensions are given in inches.*
3. *Circled numbers refer to item numbers.*

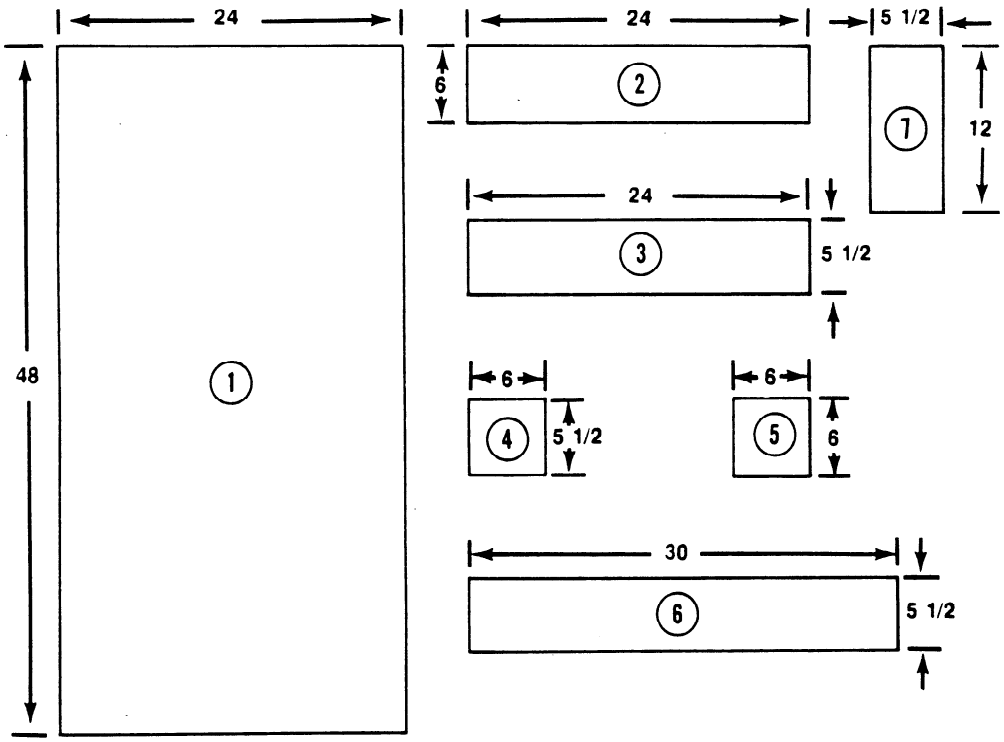

Item Number	Pieces	Width (Inches)	Length (Inches)	Material
1	3	48	24	3/4- inch plywood
2	1	6	24	3/4- inch plywood
3	2	5 1/2 (actual)	24	2- by 6-inch lumber
4	2	5 1/2 (actual)	6	2- by 6-inch lumber
5	1	6	6	3/4- inch plywood
6	6	5 1/2 (actual)	30	2- by 6-inch lumber
7	2	5 1/2 (actual)	12	2- by 6-inch lumber

Figure 3-2. Material required for load spreader for honeycomb stack 1

Notes

1. *These drawings are not drawn to scale.*
2. *All dimensions are given in inches.*
3. *Circled numbers refer to item numbers from Figure 3-2.*

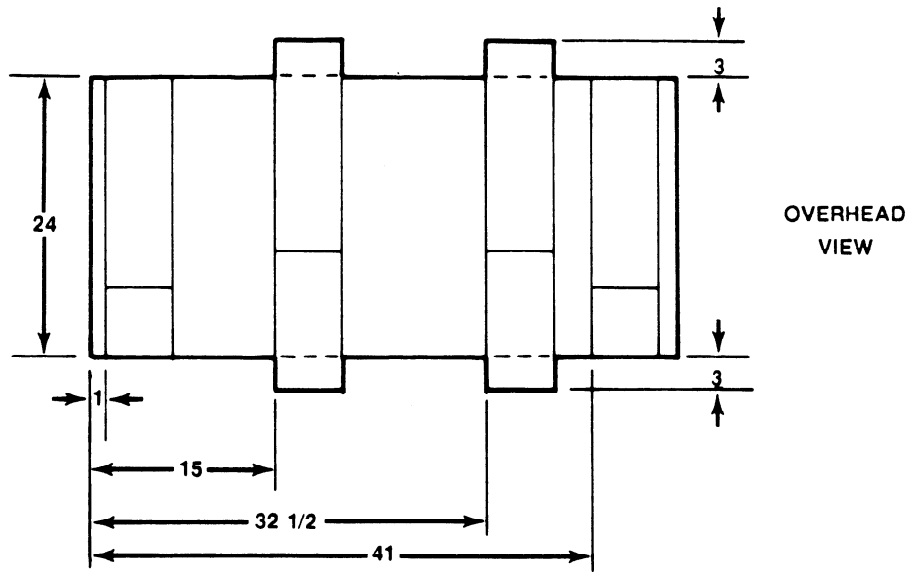

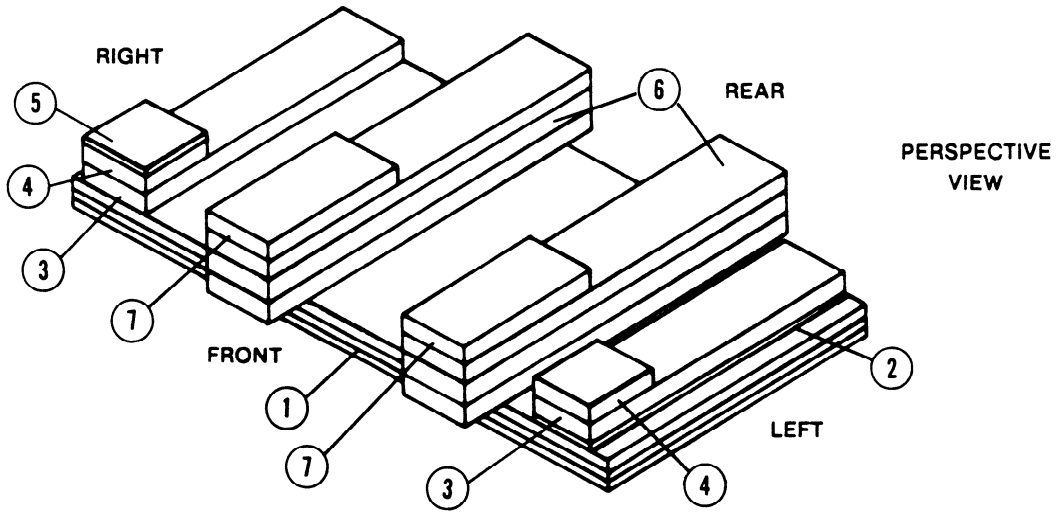

Step:

1. Construct the load spreader for honeycomb stack 1 using materials from Figure 3-2 as shown above.
2. Secure the plywood and lumber in place as shown with glue, eightpenny nails, and sixteen-penny nails.

Figure 3-3. Load spreader for honeycomb stack 1 constructed

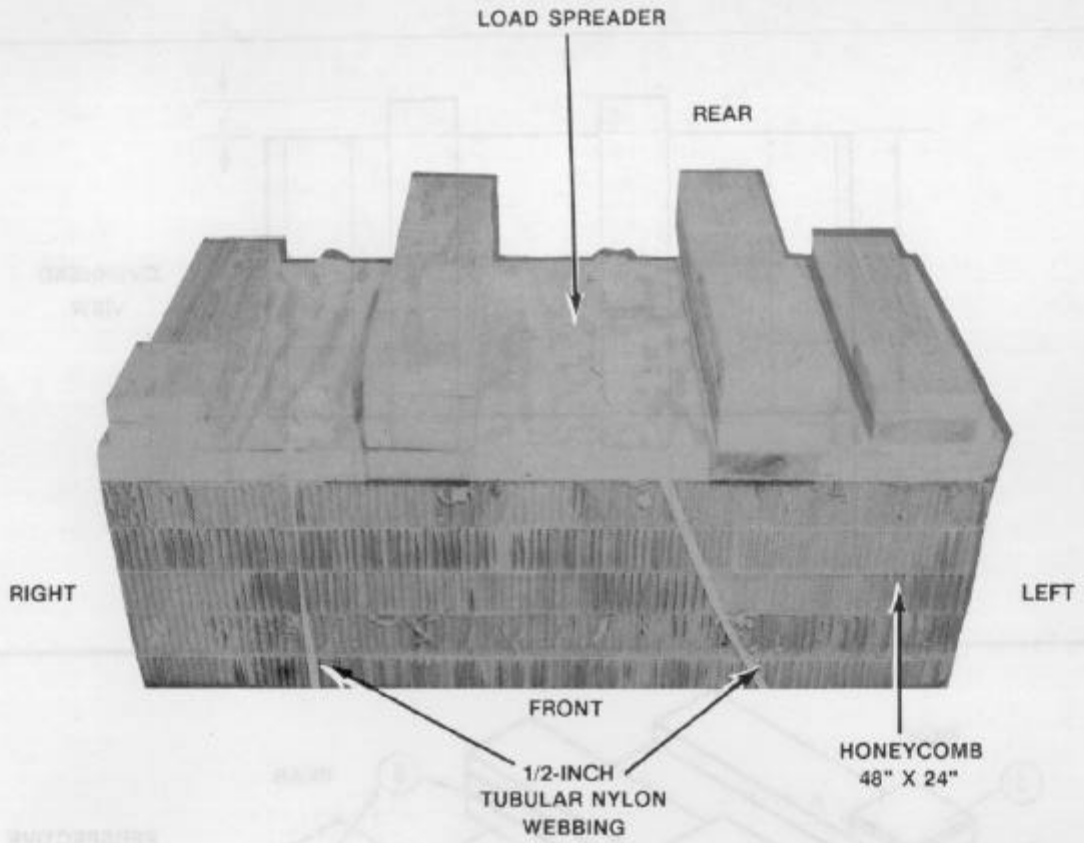

Stack Number	Pieces	Width (Inches)	Length (Inches)	Material	Instructions
1	5	48	24	Honeycomb	Place honeycomb as the base. Place load spreader on top of the base. Wrap two 20-foot lengths of 1/2-inch tubular nylon webbing around the stack. Use tape along the edges of the stack to hold the 1/2-inch tubular nylon webbing in place.

Figure 3-4. Honeycomb stack 1 prepared

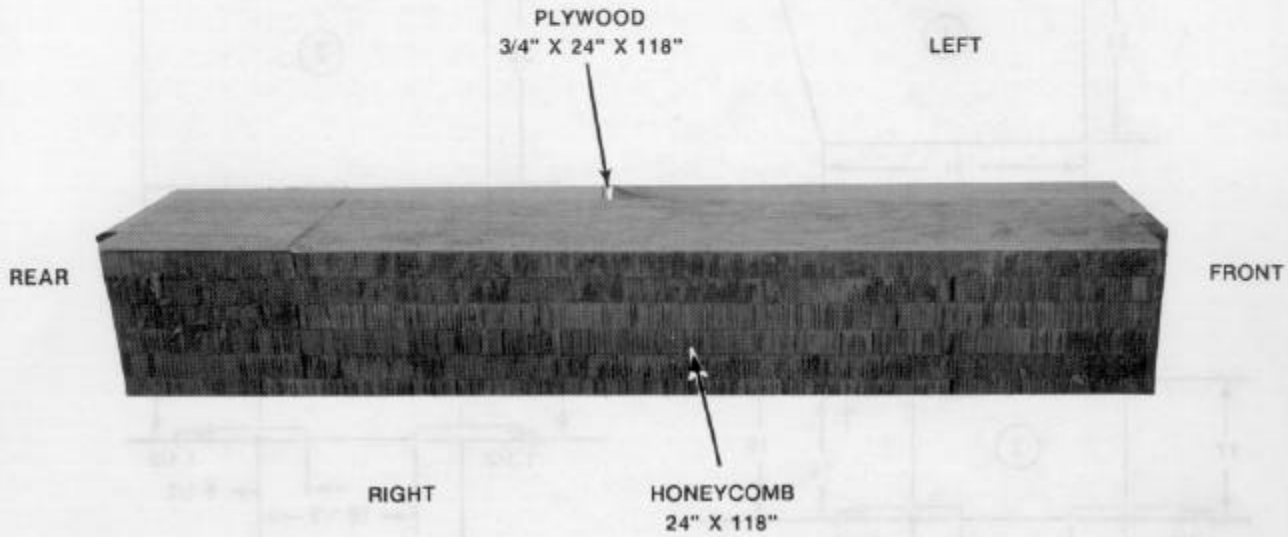

Stack Number	Pieces	Width (Inches)	Length (Inches)	Material	Instructions
2	6	24	118	Honeycomb	Place honeycomb as the base.
	1	24	118	3/4-inch plywood	Place plywood on top of the base.
3	6	24	118	Honeycomb	Place honeycomb as the base.
	1	24	118	3/4-inch plywood	Place plywood on top of the base.

Figure 3-5. Honeycomb stacks 2 and 3 prepared

Notes

1. *These drawings are not drawn to scale.*
2. *All dimensions are given in inches.*
3. *Circled numbers refer to item numbers.*

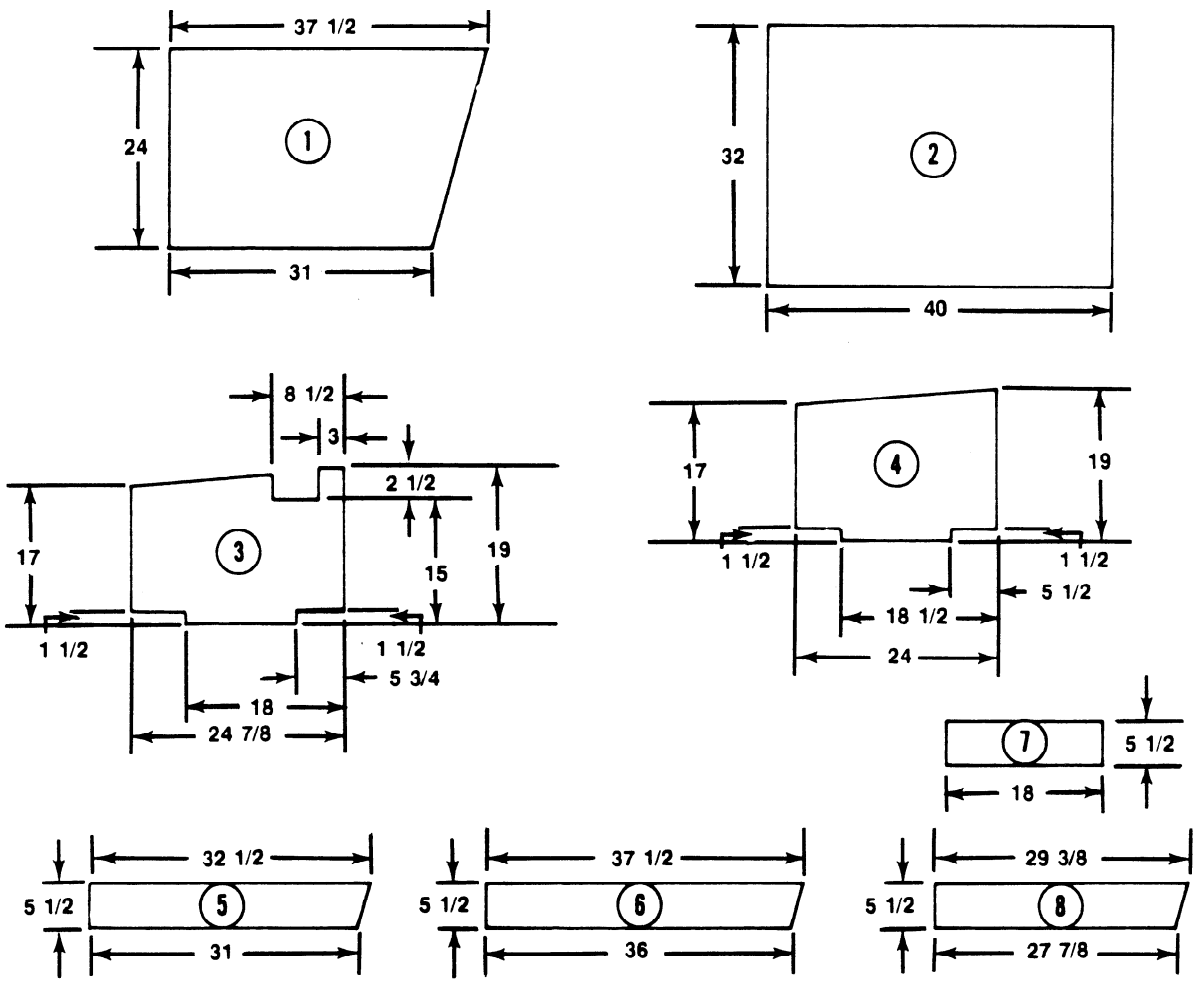

Item Number	Pieces	Width (Inches)	Length (Inches)	Material
1	1	37 1/2	24	3/4-inch plywood
2	2	40	32	3/4-inch plywood
	1	40	32	1/4-inch plywood
3	3	24 7/8	19	3/4-inch plywood
4	3	24	19	3/4-inch plywood
5	1	32 1/2	5 1/2 (actual)	2- by 6-inch lumber
6	1	37 1/2	5 1/2 (actual)	2- by 6-inch lumber
7	1	18	5 1/2 (actual)	2- by 6-inch lumber
8	1	29 3/8	5 1/2 (actual)	2- by 6-inch lumber

Figure 3-6. Material required for load spreader for honeycomb stack 4

Notes

1. *These drawings are not drawn to scale.*
2. *All dimensions are given in inches.*
3. *Circled numbers refer to item numbers from Figure 3-6.*

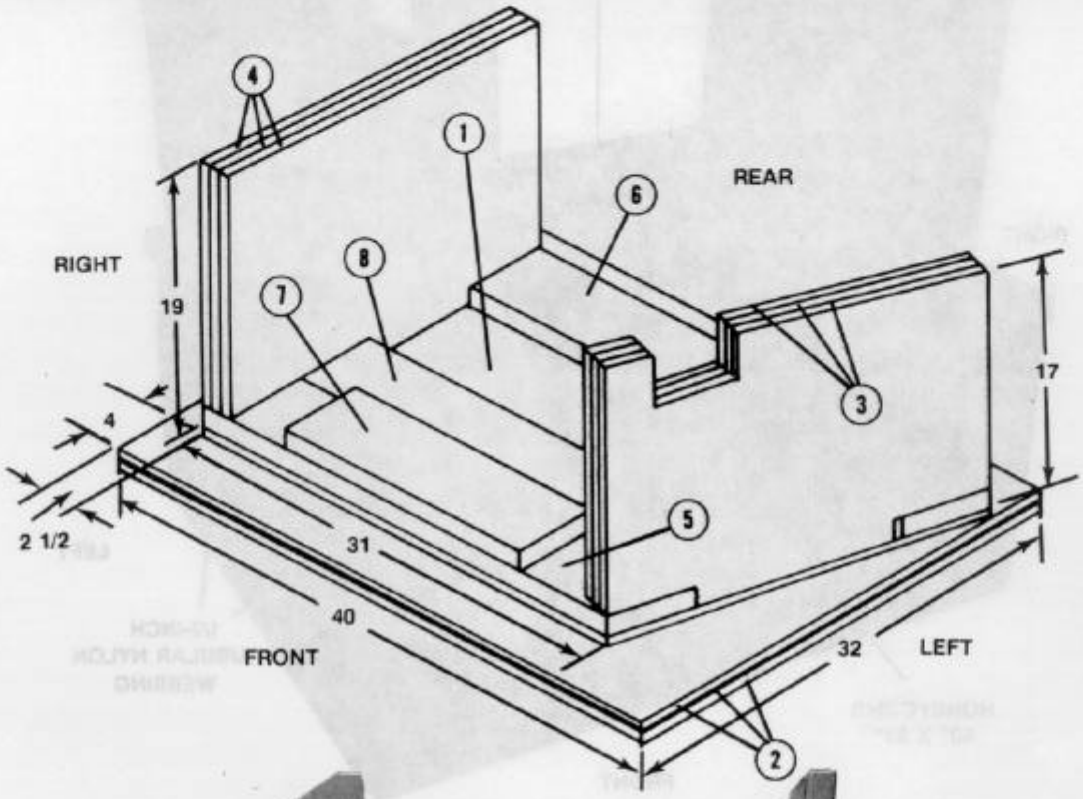

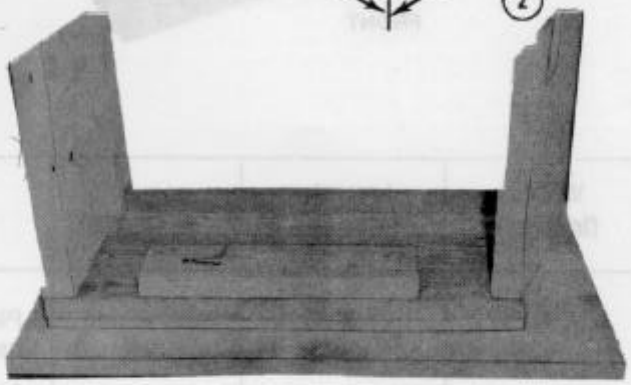

Step:

1. Construct the load spreader for honeycomb stack 4 using materials from Figure 3-6 as shown above.
2. Secure the plywood and lumber in place as shown with glue, eightpenny nails, and sixteen-penny nails.

Figure 3-7. Load spreader for honeycomb stack 4 constructed

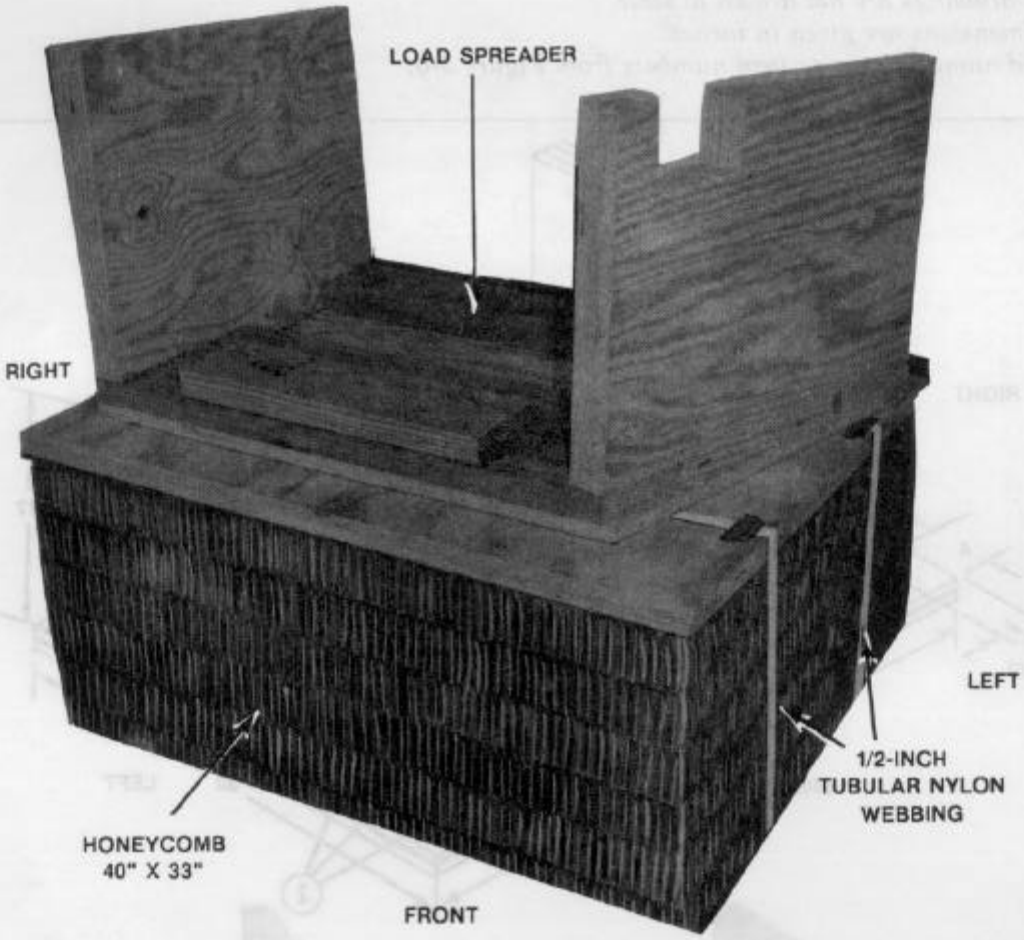

Stack Number	Pieces	Width (Inches)	Length (Inches)	Material	Instructions
4	6	40	33	Honeycomb	Place honeycomb as the base. Place load spreader on top of the base. Wrap two 20-foot lengths of 1/2-inch tubular nylon webbing around the stack. Use tape along the edges of the stack to hold the 1/2-inch tubular nylon webbing in place.

Figure 3-8. Honeycomb stack 4 prepared

Stack Number	Pieces	Width (Inches)	Length (Inches)	Material	Instructions
5	7	18	18	Honeycomb	Form stack.

Figure 3-9. Honeycomb stack 5 prepared

Notes

1. *These drawings are not drawn to scale.*
2. *All dimensions are given in inches.*
3. *Circled numbers refer to item numbers.*

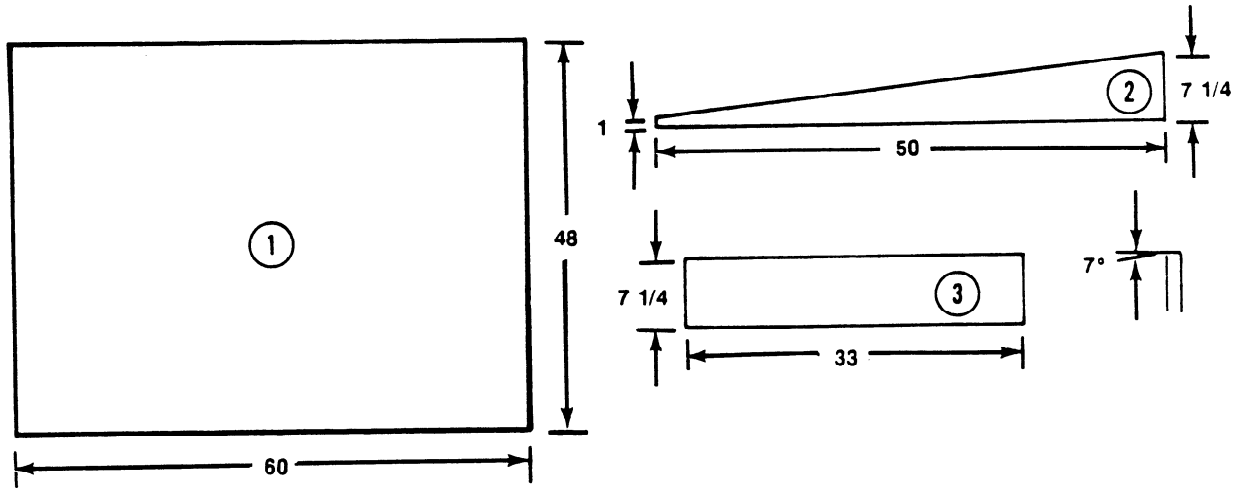

Item Number	Pieces	Width (Inches)	Length (Inches)	Material
1	3	48	60	3/4-inch plywood
2	4	7 1/4 (actual)	50	2- by 8-inch lumber
3	1	7 1/4 (actual)	33	2- by 8-inch lumber

Figure 3-10. Material required for load spreader for honeycomb stack 6

Notes

1. *These drawings are not drawn to scale.*
2. *All dimensions are given in inches.*
3. *Circled numbers refer to item numbers from Figure 3-10.*

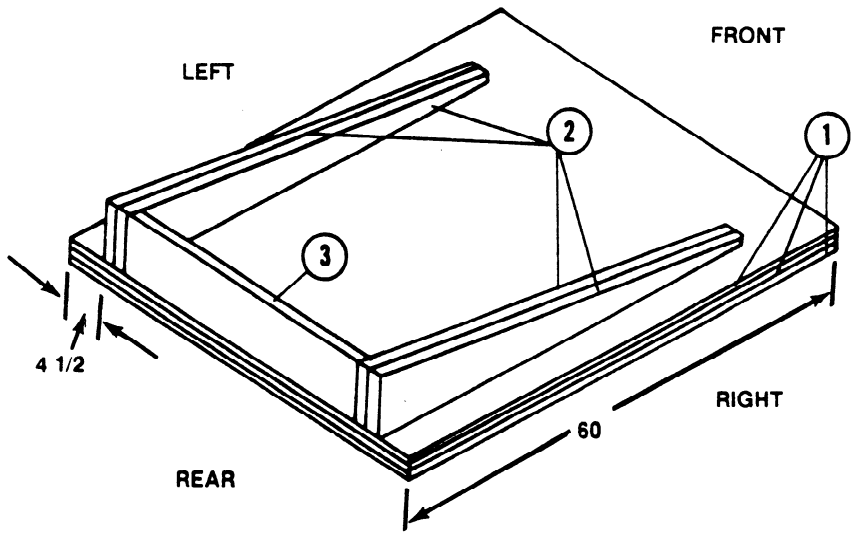

Step:

1. Construct the load spreader for honeycomb stack 6 using materials from Figure 3-10 as shown above.
2. Secure the plywood and lumber in place as shown with glue, eightpenny nails, and sixteen-penny nails.

Figure 3-11. Load spreader for honeycomb stack 6 constructed

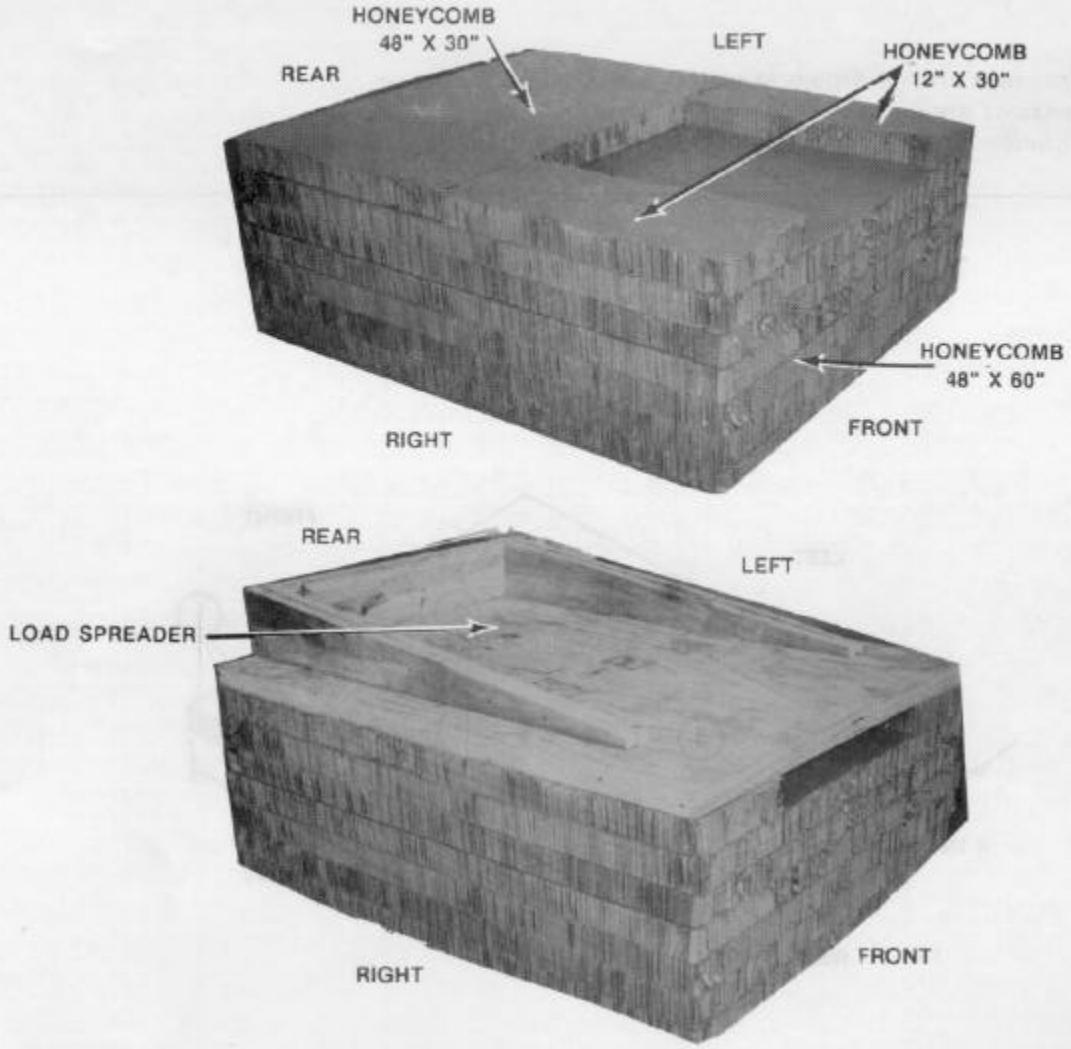

Stack Number	Pieces	Width (Inches)	Length (Inches)	Material	Instructions
6	6	48	60	Honeycomb	Place honeycomb as the base.
	1	48	30	Honeycomb	Place honeycomb on top of the base, flush with the rear edge of the stack.
	2	12	30	Honeycomb	Place one piece of honeycomb on each side of the 48- by 60-inch honeycomb even with the 60-inch edge. Place load spreader on top of the stack.

Figure 3-12. Honeycomb stack 6 prepared

Notes

1. *This drawing is not drawn to scale.*
2. *All dimensions are given in inches.*

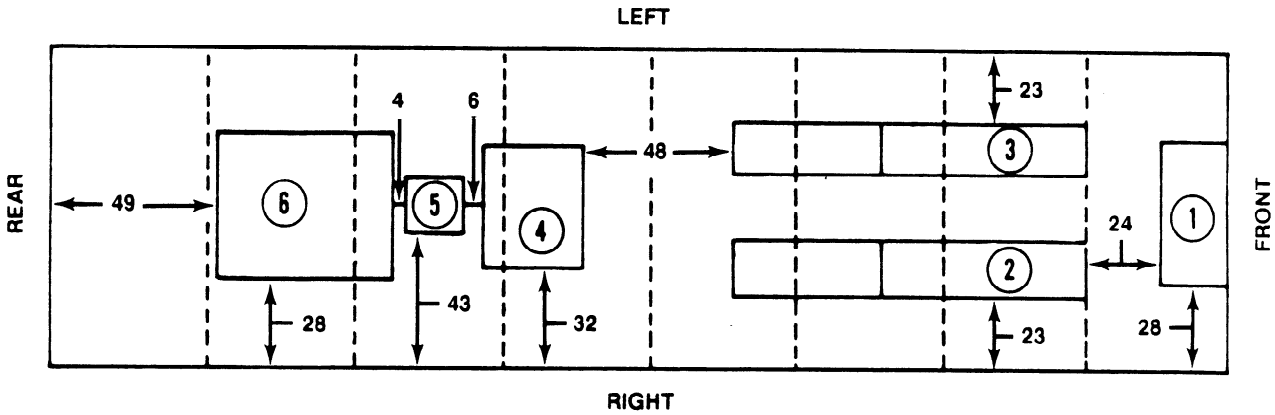

Stack Number	Position on Platform
	Place stack:
1	Centered flush with the front edge of the platform. Be sure that the pre-positioned nylon ties run in a front-to-rear direction.
2	23 inches from inside right rail and 24 inches from the rear of stack 1.
3	23 inches from inside left rail and 24 inches from the rear of stack 1.
4	Centered 48 inches from the rear of stacks 2 and 3. Be sure that the pre-positioned nylon ties run in a side-to-side direction.
5	Centered 6 inches from the rear of stack 4.
6	Centered 4 inches from the rear of stack 5.

Figure 3-13. Honeycomb stacks, load spreaders, and nylon webbing positioned on platform

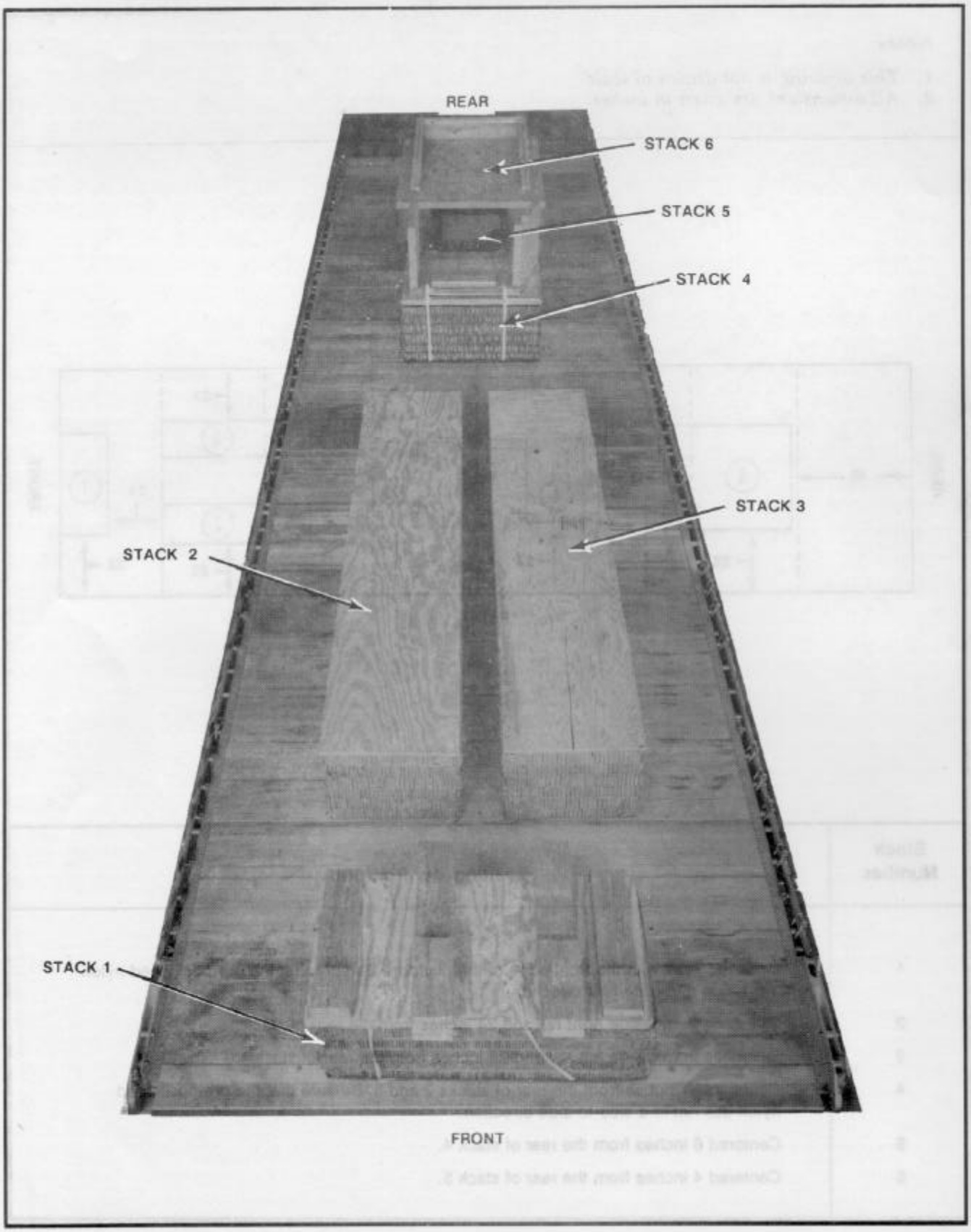

Figure 3-14. Front view of honeycomb stacks positioned on platform

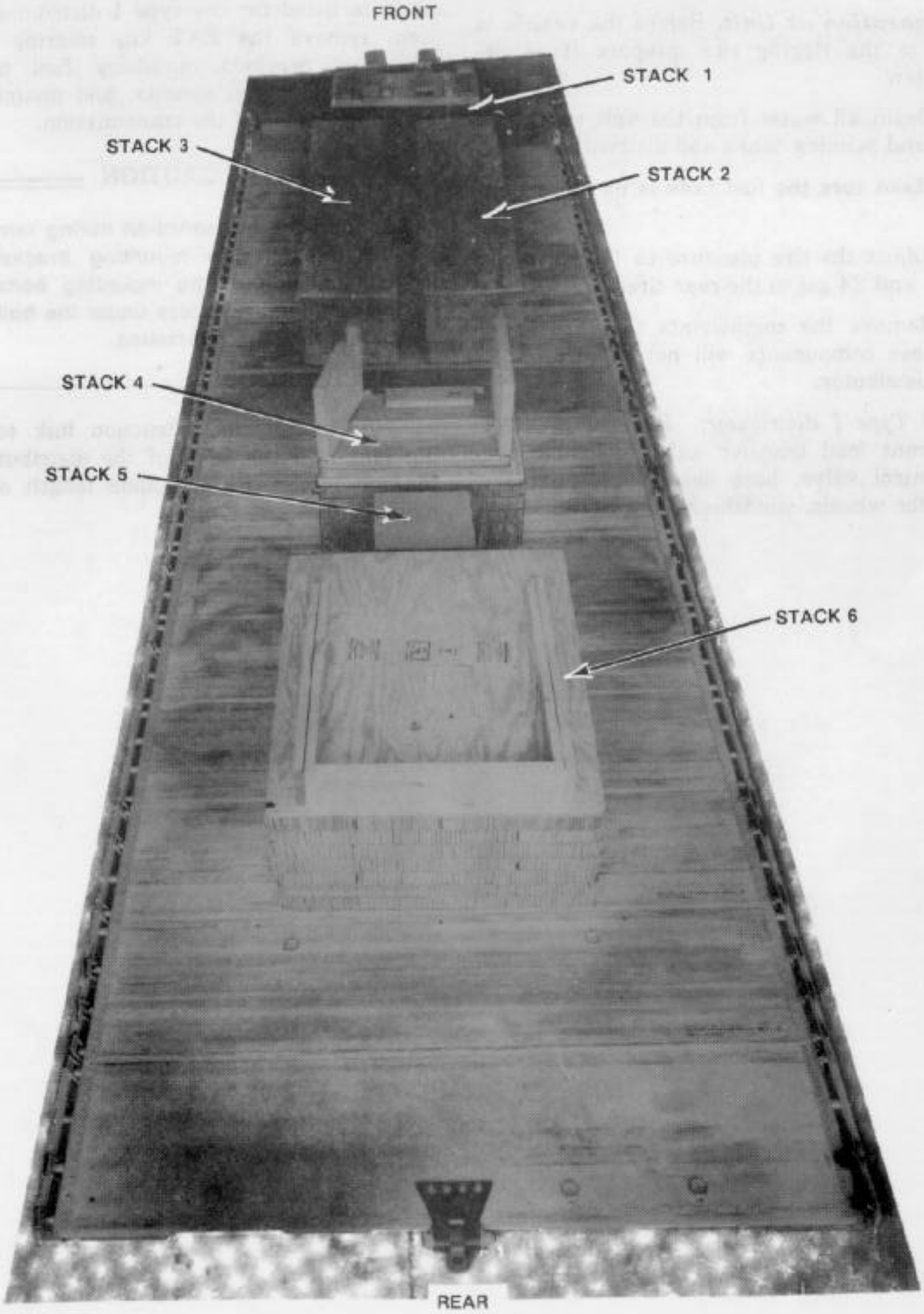

Figure 3-15. Rear view of honeycomb stacks positioned on platform

3-4. Preparing Vehicle

Prepare the vehicle as described below.

a. Preparation at Unit. Before the vehicle is delivered to the rigging site, prepare it as described below.

(1) Drain all water from the unit to include the main and priming tanks and distribution lines.

(2) Make sure the fuel tank is no more than 1/2 full.

(3) Adjust the tire pressure to 17 psi in the front tires and 24 psi in the rear tires.

(4) Remove the components that are listed below. These components will not be airdropped with the distributor.

(a) Type I distributor. Remove the IAT kit, the front load transfer axle, hydraulic cylinders, control valve, hose assemblies, auxiliary load transfer wheels, windshield, and ROPS.

(b) Type II distributor. Remove the components listed for the type I distributor. In addition, remove the EAT kit, steering axle, axle mounting brackets, auxiliary fuel tanks, jack stands, skid plate, mounts, and mounting brackets on each side of the transmission.

CAUTION

Support the transmission during removal of the transmission mounting brackets and reinstallation of the mounting bolts. Also, place 3/8-inch spacers under the bolt heads before they are reinstalled.

(5) Install the extraction link to the towing pintle on the front of the distributor. Safety the top latch with a double length of type III nylon cord.

b. Preparation at Rigging Site. After the vehicle is delivered to the rigging site, prepare it as shown in Figures 3-16 through 3-26.

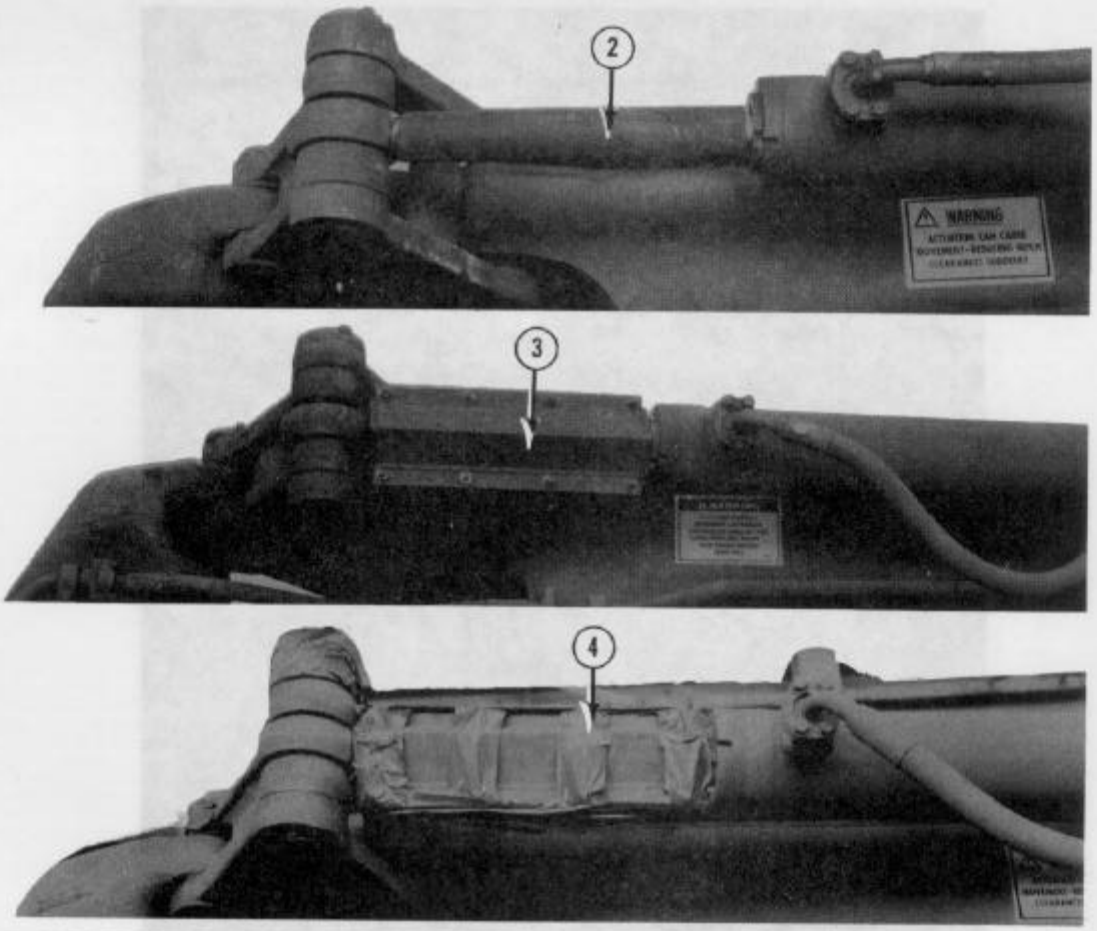

(1) Raise the distributor tank until the power and work sections are aligned (not shown).

Note

Steps 2, 3, and 4 must be performed by the vehicle operator.

(2) Install rubber bushings on the cylinder rods on each side of the vehicle.

(3) Install the steering cylinder lock sleeves on each side of the vehicle. Make sure the sleeve flanges are vertical and bolt nuts are on the outside.

(4) Place tape around the bolts and along the edges of the sleeves.

Figure 3-16. Steering cylinder rod lock sleeves installed

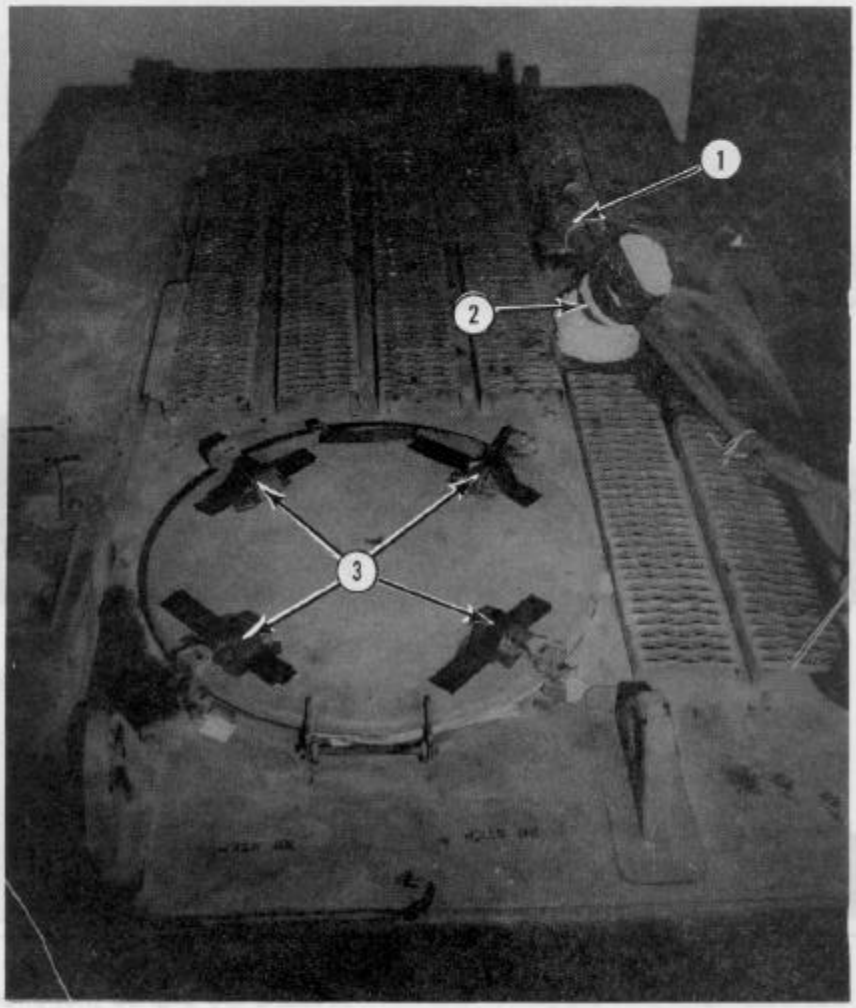

(1) Remove the vacuum hoses from the connectors on top of the tank. Tie the hoses to the grid with type III nylon cord.

(2) Pad the connectors with cellulose wadding, and tape them.

(3) Tape the tank hatch locks closed.

Figure 3-17. Vacuum hoses, connectors, and hatch locks prepared

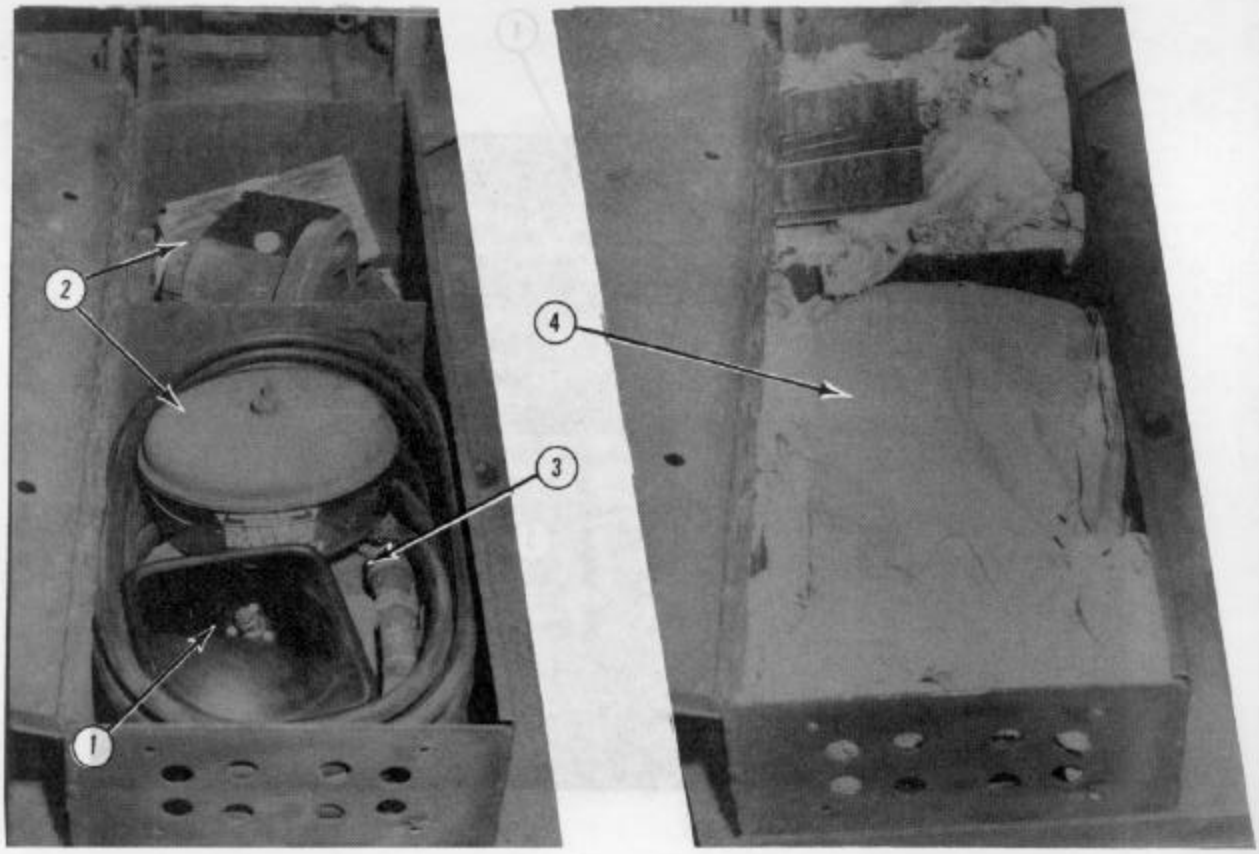

(1) Remove the rearview mirror. Pad it with cellulose wadding, and tape it. Stow it in the toolbox.

(2) Remove the air precleaner and its entire shaft. Pad them with cellulose wadding, and stow them in the toolbox.

(3) Remove the air gages, hoses, and nozzle from the sprayer hose. Pad them with cellulose wadding, and stow them in the toolbox.

(4) Pad the toolbox with cellulose wadding.

Figure 3-18. Rearview mirror, air precleaner and shaft, air gages and hoses, sprayer hose nozzle, and toolbox prepared

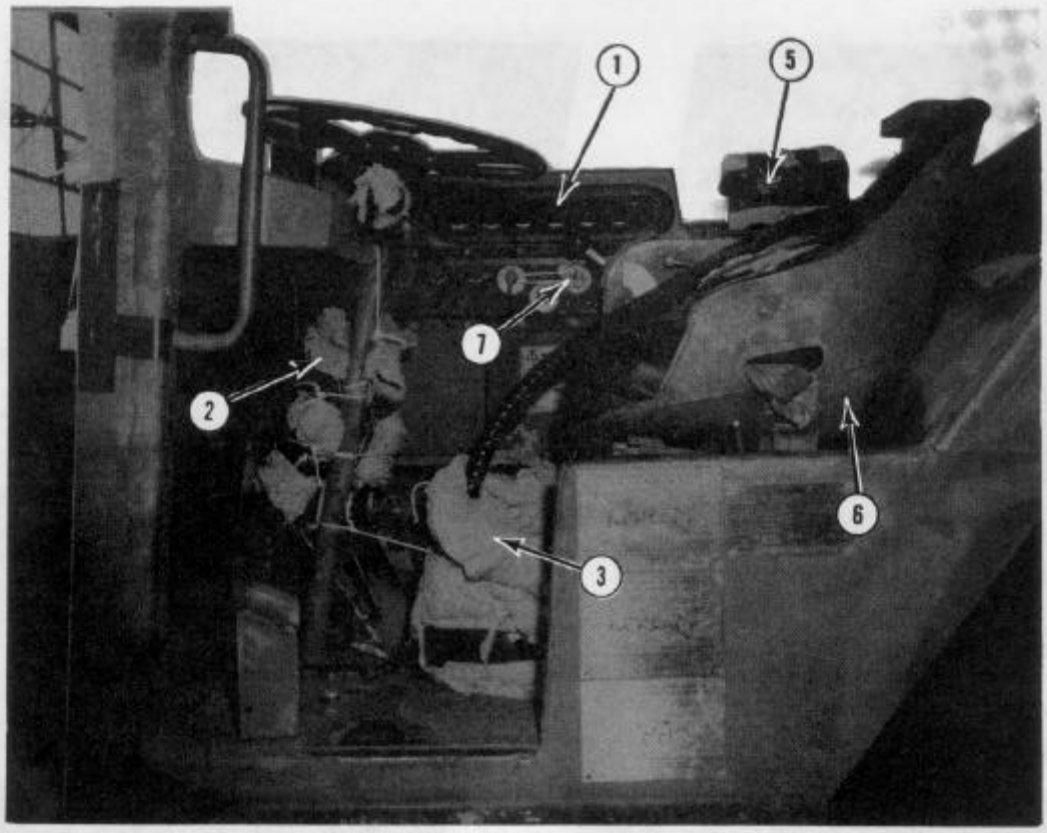

1. Tape the instrument panel.
2. Pad the windshield wiper controls with cellulose wadding, and tape them. Tie the padded controls to the steering wheel column with type III nylon cord.
3. Remove the water distributor control box. Do not disconnect the wires. Pad the control box with cellulose wadding, and tape it. Tie the control box to the floor of the operator compartment with type III nylon cord.
4. Remove the plastic control handles (not shown), and place them in the operator compartment toolbox.
5. Pad and tape the area where the control handles were located.
6. Lower the seat, and move it to its rearmost position.
7. Tie the ignition key in place with type III nylon cord.

Figure 3-19. Operator compartment prepared

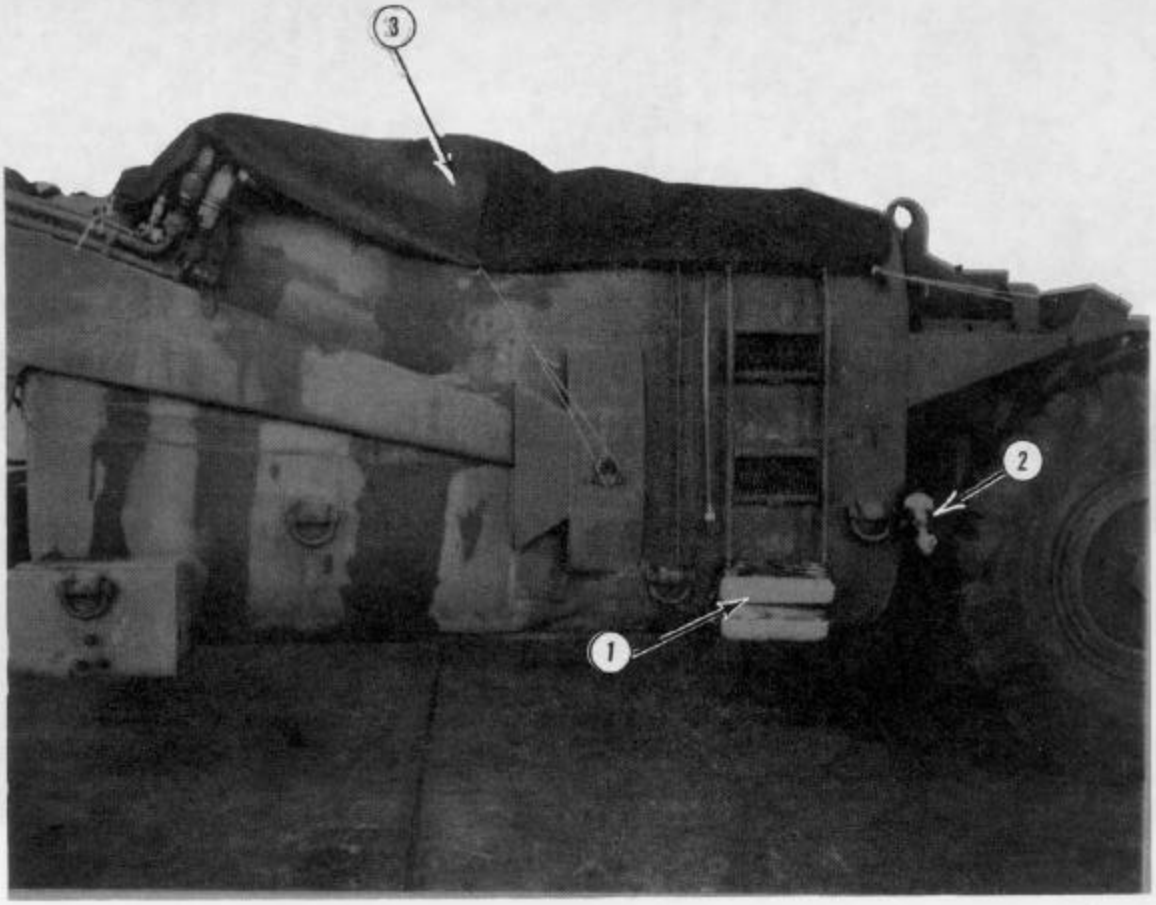

(1) Fold the steps, and lock them in place with the restraint pins. Pad the bottom step with cellulose wadding, and tape it.

(2) Pad the tank primer control handle with cellulose wadding, and tape it.

(3) Place a 6- by 8-foot piece of cotton duck cloth over the tank. Make sure the walk grids are covered. Tie the cover in place with type III nylon cord.

Figure 3-20. Steps and tank primer control handle prepared and tank covered

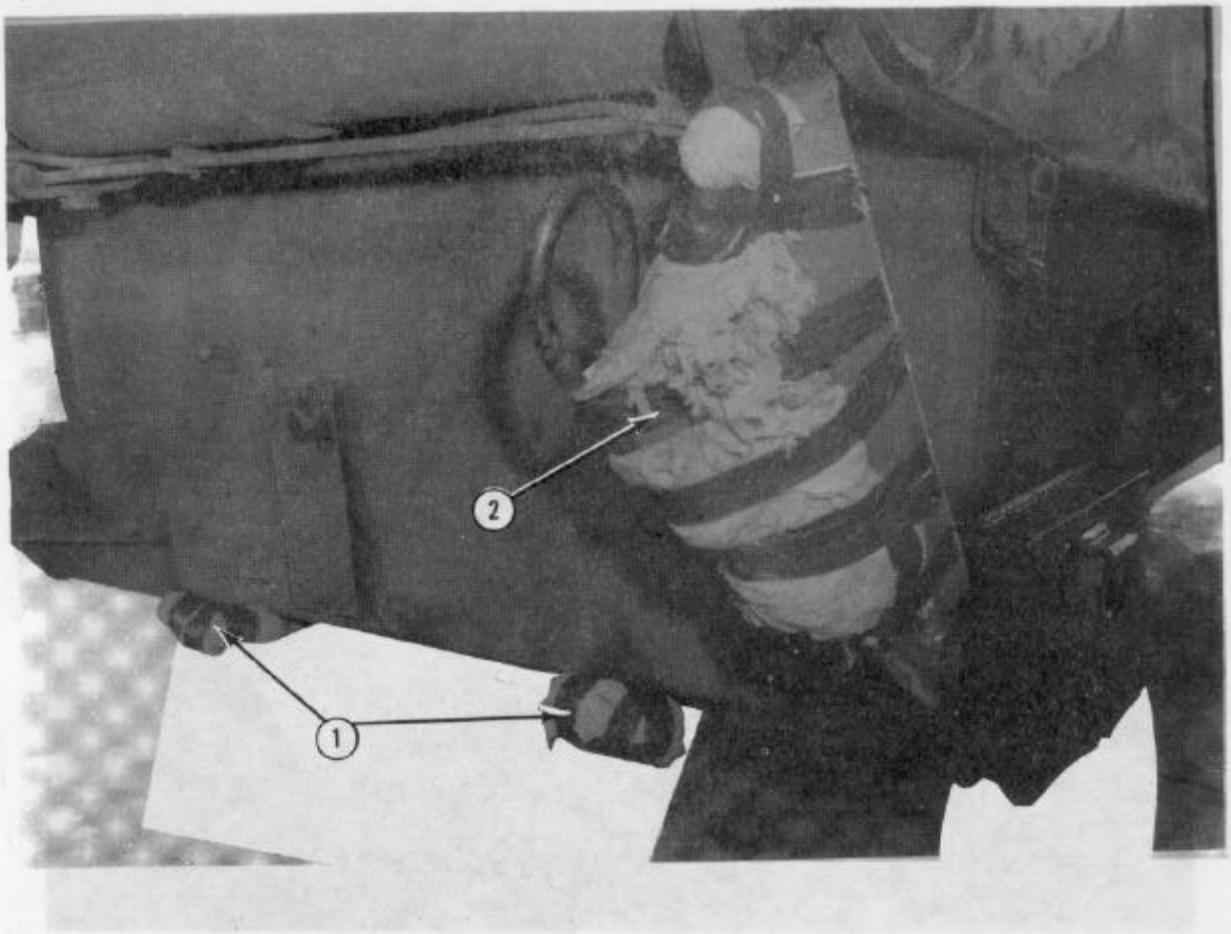

1. Pad the skid plates on each side of the drain plug with cellulose wadding, and tape them.
2. Pad the hydraulic cylinders on each side of the vehicle with cellulose wadding, and tape them.
3. Tape all lights and gages (not shown).
4. Prepare the battery according to AFR 71-4/TM 38-250. Secure the battery box with type III nylon cord (not shown).

Figure 3-21. Skid plates, hydraulic cylinders, lights, gages, and battery box prepared

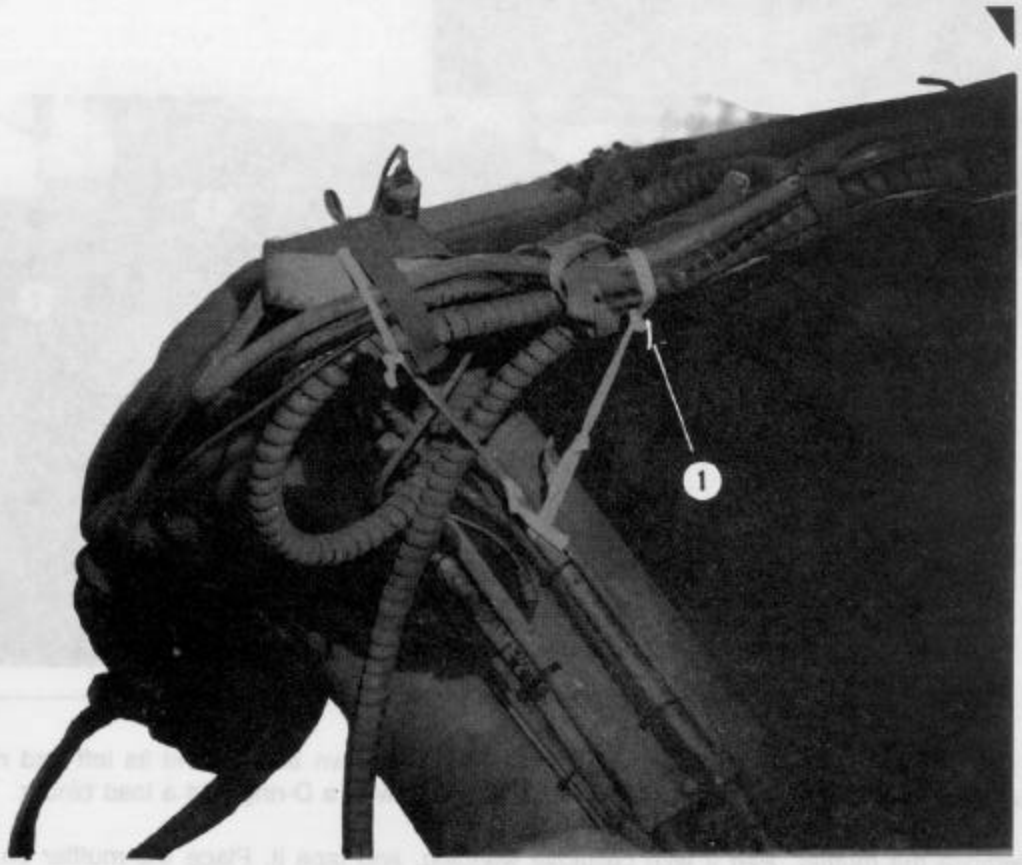

(1) Lower the hydraulic and electric lines to the vehicle body. Tie the lines in place with 1/2-inch tubular nylon webbing.

Figure 3-22. Hydraulic and electric lines prepared

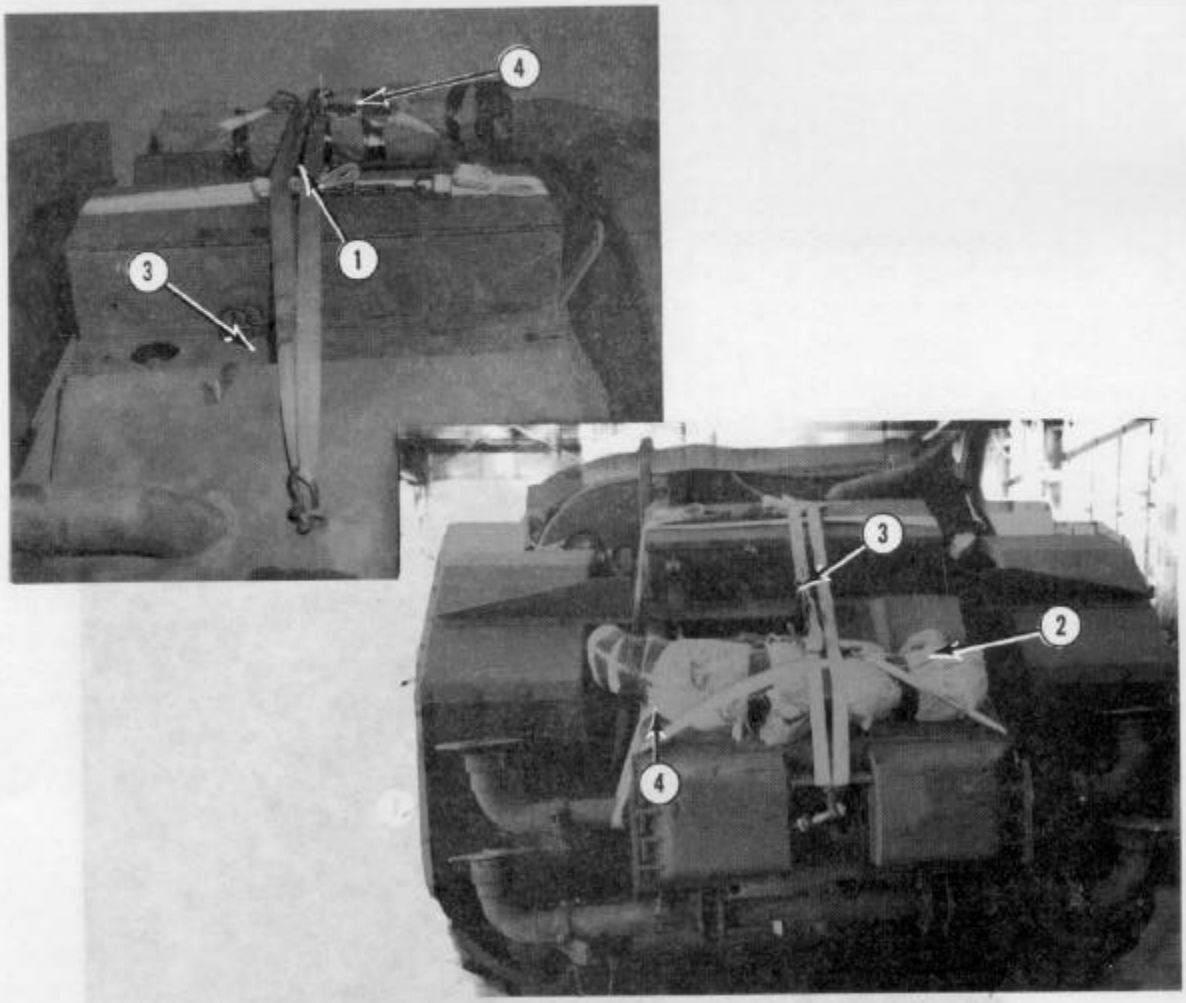

(1) Pass a 15-foot tiedown strap across the toolbox and down and around its left and right side axle. Fasten the strap in the center of the toolbox lid with a D-ring and a load binder.

(2) Remove the muffler. Pad it with cellulose wadding, and tape it. Place the muffler on the rear of the vehicle.

(3) Install a clevis in the rear center ring. Pass a 15-foot tiedown strap through the clevis, over the toolbox and muffler, and around the pintle. Fasten the strap with a D-ring and a load binder.

(4) Pass a 15-foot tiedown strap around the top sprayer pipe on the left side of the vehicle, over the muffler, and around the sprayer pipe on the right side of the vehicle. Fasten the ends of the strap on top of the muffler with a D-ring and a load binder.

(5) Secure the hose reel with 1/2-inch tubular nylon webbing (not shown).

(6) Tape the adjustment handles and spray valve on the rear of the distributor (not shown).

Figure 3-23. Rear of vehicle prepared

Notes

1. *This drawing is not drawn to scale.*
2. *All dimensions are given in inches.*

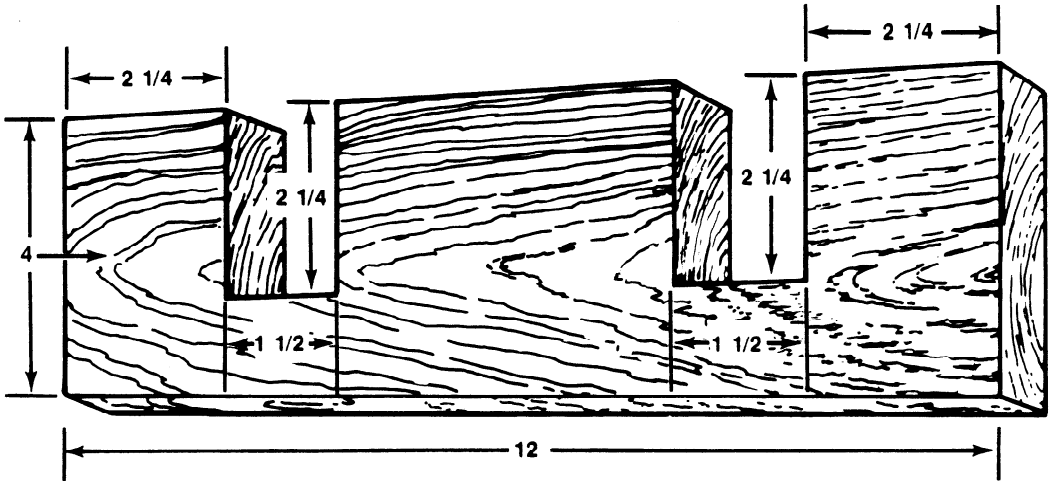

Step:

1. Use a 2- by 4- by 12-inch piece of lumber to construct the motor support as shown above.
2. Make two 1 1/2- by 2 1/4-inch cutouts as shown above.

Figure 3-24. Motor support constructed

Note

For viewing purposes, the motor support is not fully seated.

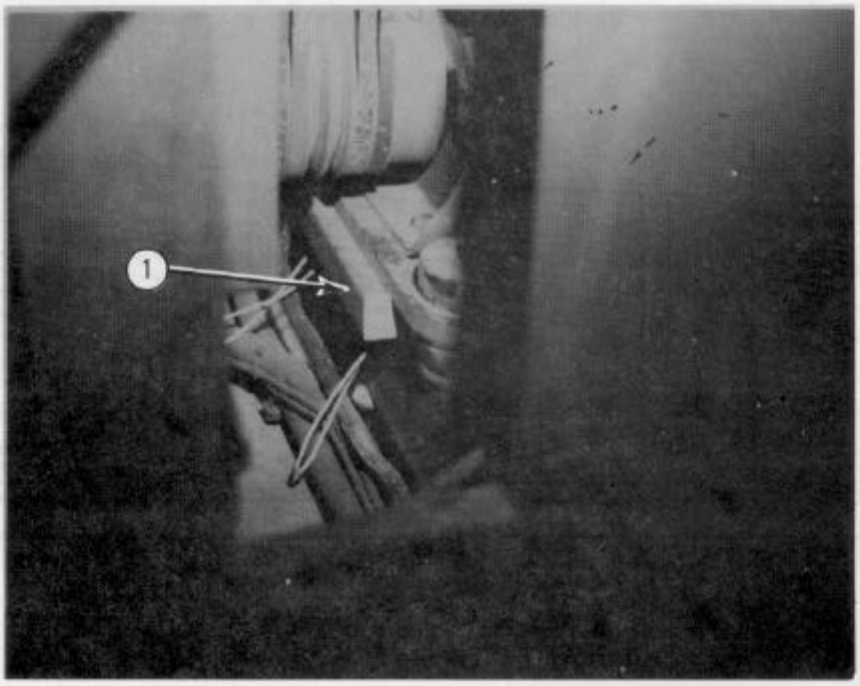

(1) Place the motor support between the motor support mount and the frame. Align the cutouts with the bolts, and tie the support in place with two lengths of type III nylon cord.

Figure 3-25. Motor support installed

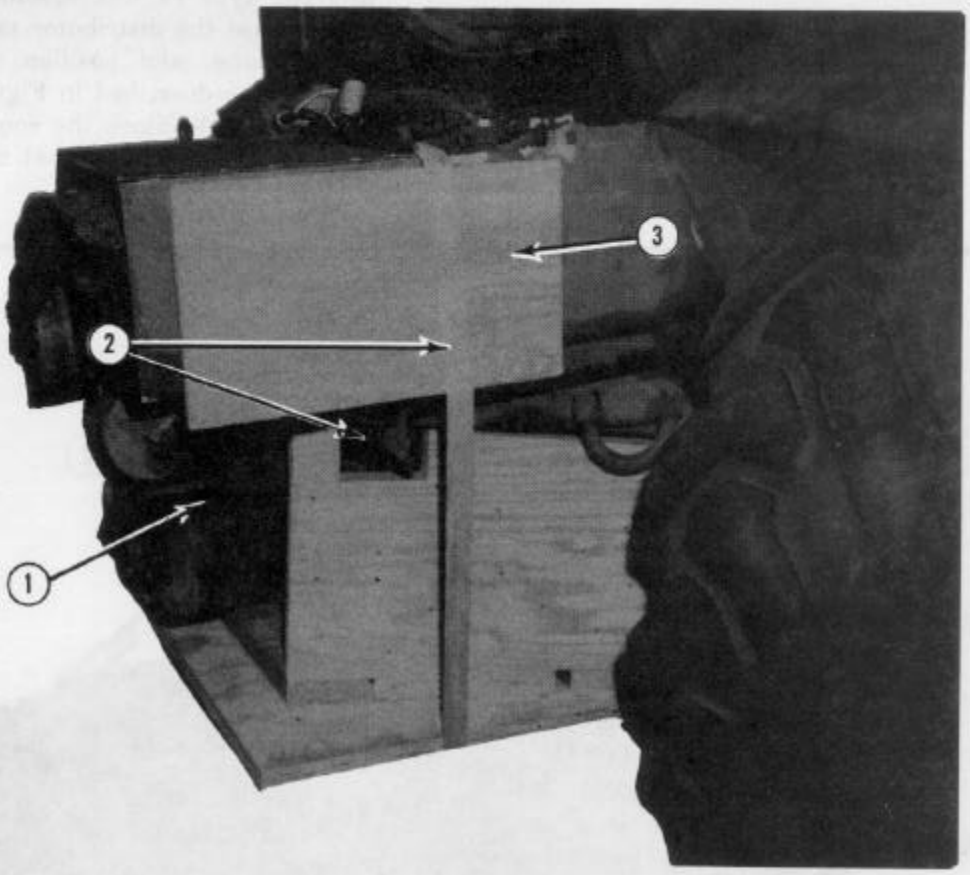

(1) Make sure the EAT transmission housing mounting brackets are removed from the type II vehicle. The arrow in the photo points to the place where the mounting bracket on one side was removed.

(2) Install the load spreader for honeycomb stack 4 on the transmission housing. Make sure the cutout on the load spreader is on the right side of the vehicle. Use a 15-foot tiedown assembly to secure the load spreader in place.

(3) Place a 3/4- by 12- by 18-inch piece of plywood against the side of the box above the transmission housing.

Figure 3-26. Mounting bracket removed and load spreader installed on transmission housing

3-5. Installing Lifting Slings and Positioning Vehicle

Install four 9-foot (4-loop), type XXVI nylon webbing slings; two 3-foot (4-loop), type XXVI nylon webbing slings; four screw-pin clevises; and two type IV link assemblies to lift the vehicle. Raise the distributor tank above the horizontal plane, and position the vehicle on the platform as described in Figure 3-27. Also, use these slings to place the completely rigged distributor on the vehicle that is used to transport the load to the aircraft.

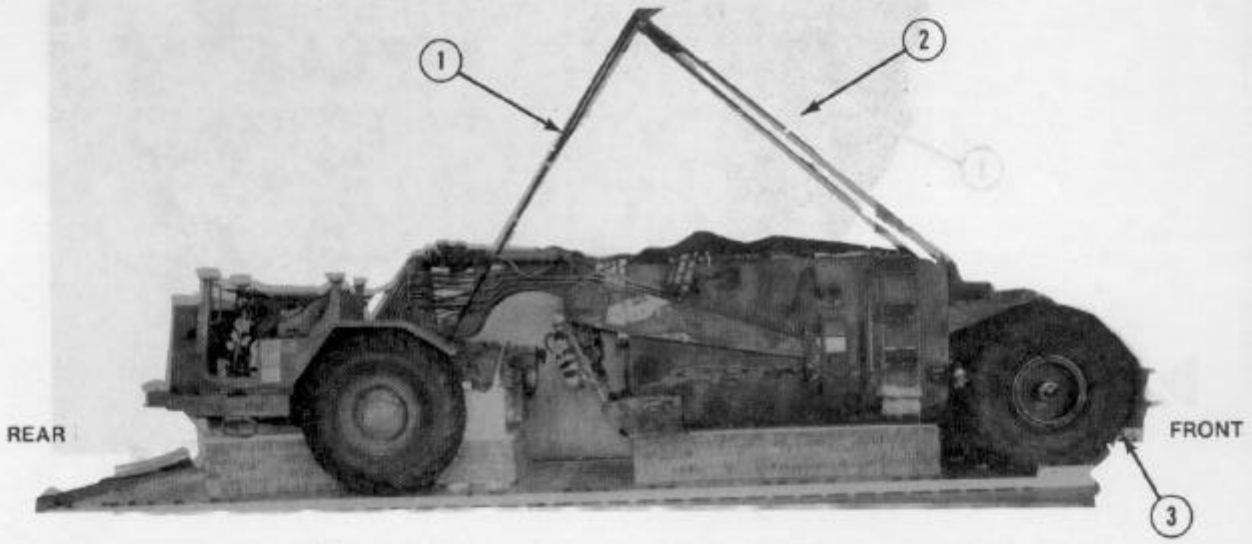

(1) Bolt two 9-foot slings to the vehicle front lifting points with screw-pin clevises. Pass the slings up between the steering cylinders and frame.

(2) Bolt two 9-foot slings to the vehicle rear lifting points with screw-pin clevises. Pass a 3-foot sling through the end loop of each 9-foot sling. Fasten the ends of each 3-foot sling together with a type IV link to form a loop.

(3) Position the vehicle on the platform with the rear of the vehicle overhanging the front of the platform by no more than 36 inches or less than 35 inches. Lower the distributor tank onto the honeycomb by cycling the controls of the distributor.

Figure 3-27. Lifting slings installed, vehicle positioned, and lifting slings removed

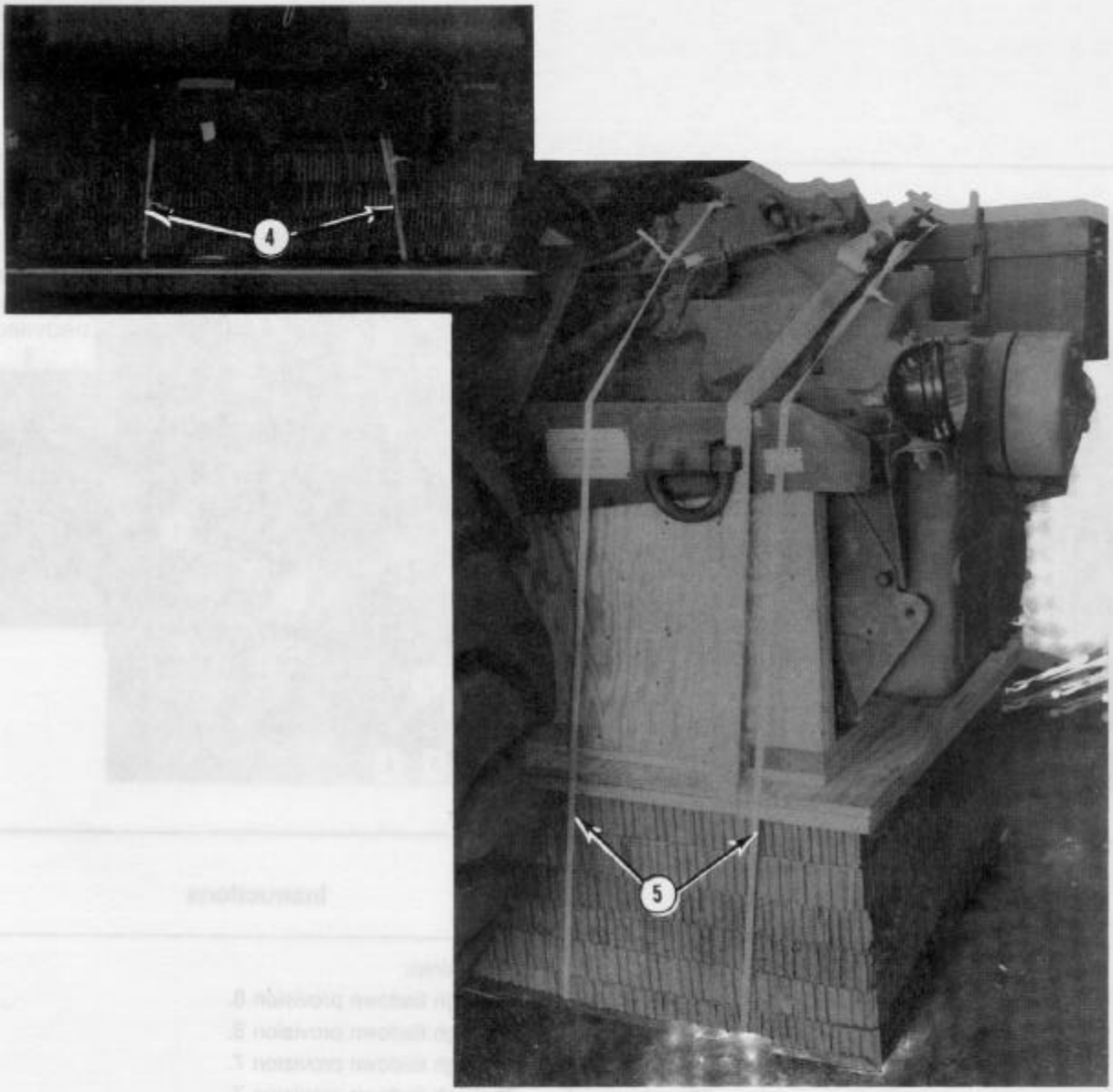

(4) Tie honeycomb stack 1 to the vehicle frame using the two lengths of 1/2-inch tubular nylon webbing that were placed during the positioning of the honeycomb.

(5) Tie honeycomb stack 4 to the transmission housing using the two lengths of 1/2-inch tubular nylon webbing that were placed during the positioning of the honeycomb.

(6) Remove the lifting slings (not shown).

Figure 3-27. Lifting slings installed, vehicle positioned, and lifting slings removed (continued)

3-6. Lashing Vehicle

Lash the water distributor to the platform with fifty-two 15-foot tiedown assemblies as shown in Figures 3-28 through 3-31. Install and safety the tiedown assemblies according to FM 10-500/TO 13C7-1-5.

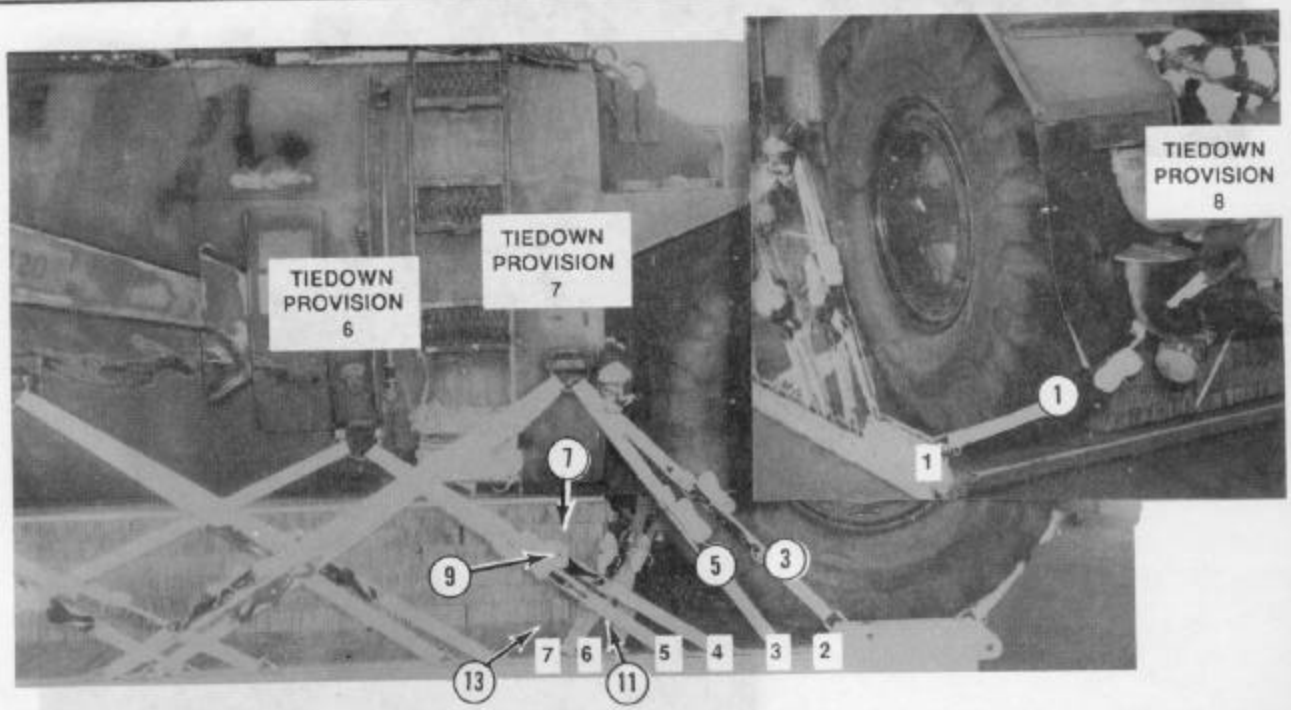

Lashing Number	Tiedown Clevis Number	Instructions
		Pass strap:
1	1	Through tiedown provision 8.
2	1A	Through tiedown provision 8.
3	2	Through tiedown provision 7.
4	2A	Through tiedown provision 7.
5	3	Through tiedown provision 7.
6	3A	Through tiedown provision 7.
7	4	Through tiedown provision 6.
8	4A	Through tiedown provision 6.
9	5	Through tiedown provision 6.
10	5A	Through tiedown provision 6.
11	6	Around mainframe on right side of vehicle.
12	6A	Around mainframe on left side of vehicle.
13	7	Around mainframe on left side of vehicle.
14	7A	Around mainframe on right side of vehicle.

Figure 3-28. Lashings 1 through 14 installed

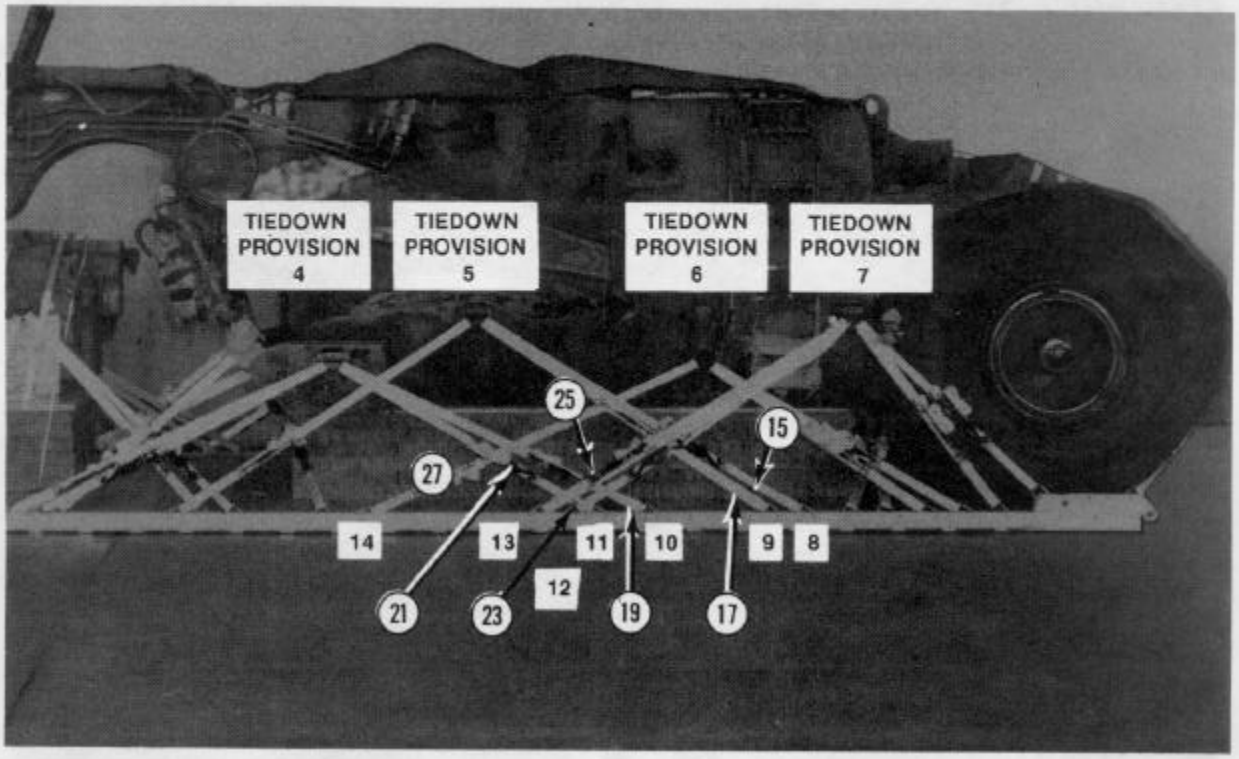

Lashing Number	Tiedown Clevis Number	Instructions
		Pass strap:
15	8	Through tiedown provision 5.
16	8A	Through tiedown provision 5.
17	9	Through tiedown provision 5.
18	9A	Through tiedown provision 5.
19	10	Through tiedown provision 4.
20	10A	Through tiedown provision 4.
21	11	Through tiedown provision 4.
22	11A	Through tiedown provision 4.
23	12	Through tiedown provision 7.
24	12A	Through tiedown provision 7.
25	13	Through tiedown provision 7.
26	13A	Through tiedown provision 7.
27	14	Through tiedown provision 6.
28	14A	Through tiedown provision 6.

Figure 3-29. Lashings 15 through 28 installed

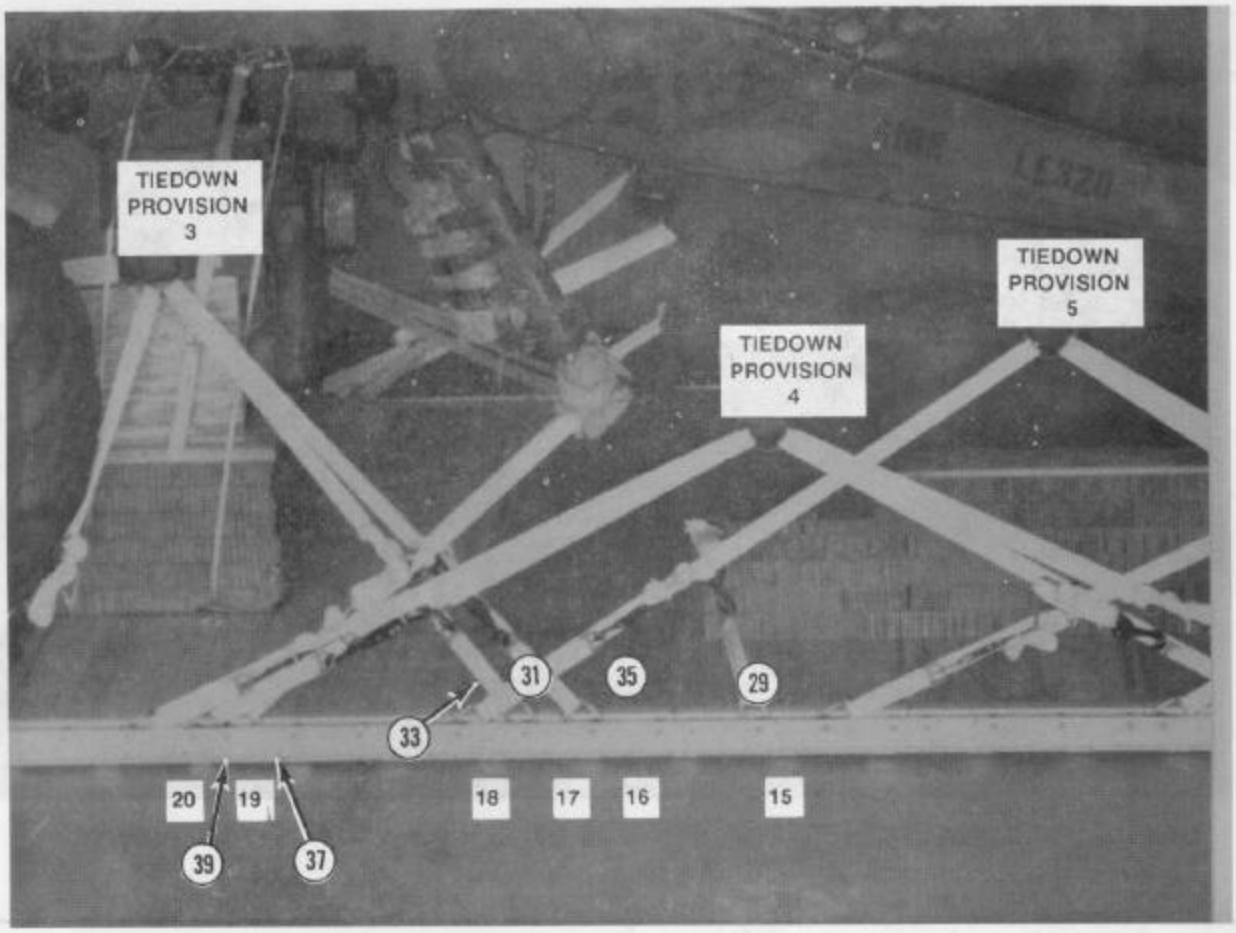

Lashing Number	Tiedown Clevis Number	Instructions
		Pass strap:
29	15	Around skid plate on right side of vehicle.
30	15A	Around skid plate on left side of vehicle.
31	16	Through tiedown provision 3.
32	16A	Through tiedown provision 3.
33	17	Through tiedown provision 3.
34	17A	Through tiedown provision 3.
35	18	Through tiedown provision 5.
36	18A	Through tiedown provision 5.
37	19	Around hydraulic cylinder on left side of vehicle.
38	19A	Around hydraulic cylinder on right side of vehicle.
39	20	Through tiedown provision 4.
40	20A	Through tiedown provision 4.

Figure 3-30. Lashings 29 through 40 installed

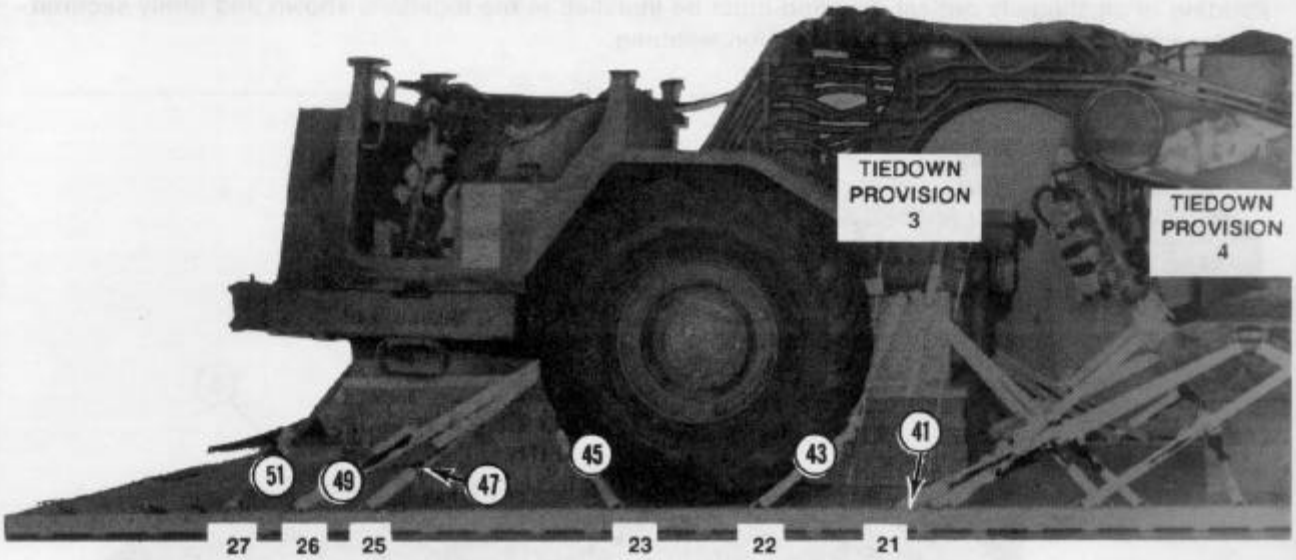

Lashing Number	Tiedown Clevis Number	Instructions
		Pass strap:
41	21	Through tiedown provision 4.
42	21A	Through tiedown provision 4.
43	22	Through tiedown provision 3.
44	22A	Through tiedown provision 3.
45	23	Through tiedown provision 2.
46	23A	Through tiedown provision 2.
47	25	Through tiedown provision 2.
48	25A	Through tiedown provision 2.
49	26	Through tiedown provision 2.
50	26A	Through tiedown provision 2.
51	27	Through tiedown provision 1.
52	27A	Through tiedown provision 1.

Figure 3-31. Lashings 41 through 52 installed

3-7. Installing Suspension Slings

Install the suspension slings as shown in Figure 3-32.

CAUTION

Padding of all slings is critical. Padding must be installed in the locations shown and firmly secured in place with tape and type I, 1/4-inch cotton webbing.

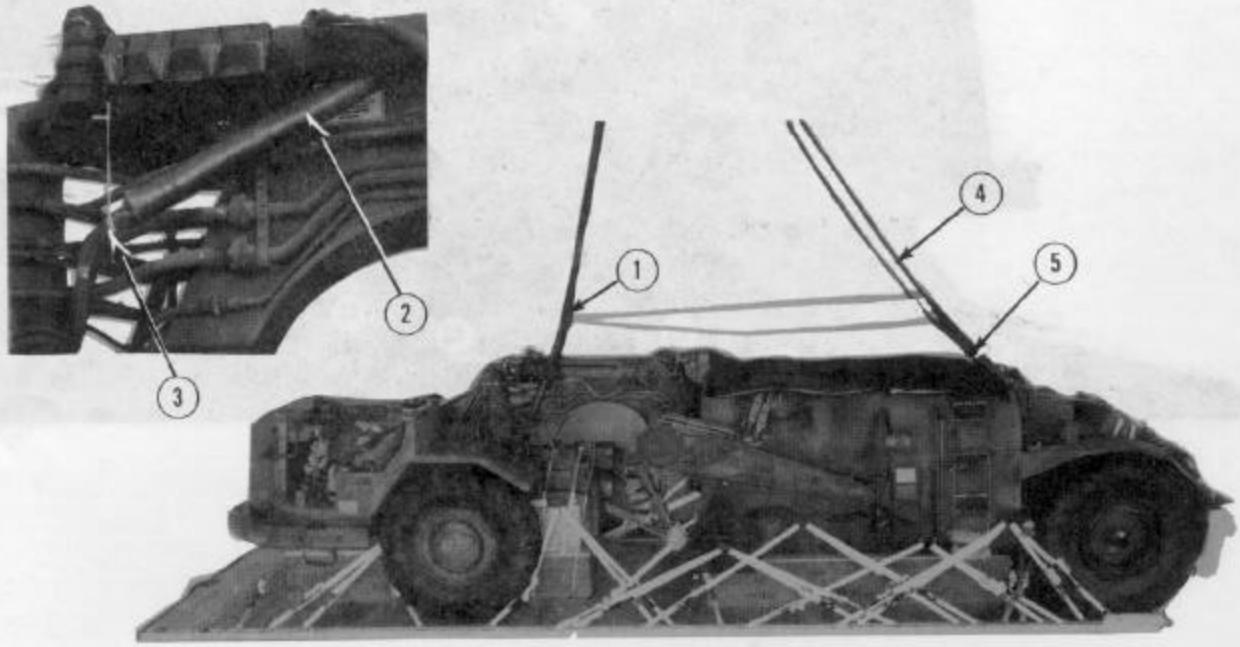

(1) Bolt a 20-foot (4-loop), type XXVI nylon webbing sling to each of the vehicle front lifting points using a screw-pin clevis.

(2) Starting 30 inches up from the clevis end of the rear slings, wrap an 8- by 36-inch piece of felt. Tie the felt in place with type I, 1/4-inch cotton webbing, and tape it.

(3) At a point just below the felt, safety tie the slings to the steering arm assembly with one double length of type I, 1/4-inch cotton webbing. Pass the slings up between the steering cylinder and the steering assembly frame. Tape the top of the steering assembly frame and the bolt on each side of the vehicle.

(4) Bolt a 20-foot (4-loop), type XXVI nylon webbing sling to each of the vehicle rear lifting points using a screw-pin clevis.

(5) Starting 1 inch up from the clevis end of the front slings, wrap an 8- by 36-inch piece of felt. Tie the felt in place with type I, 1/4-inch cotton webbing, and tape it.

Figure 3-32. Suspension slings installed

3-8. Safetying Suspension Slings

NOTICE OF EXCEPTION

The positioning of the safety tie is different from that in FM 10-500/TO 13C7-1-5. An exception to FM 10-500/TO 13C7-1-5 is granted. The procedures in this paragraph must be followed.

Safety the slings as described in Figure 3-33.

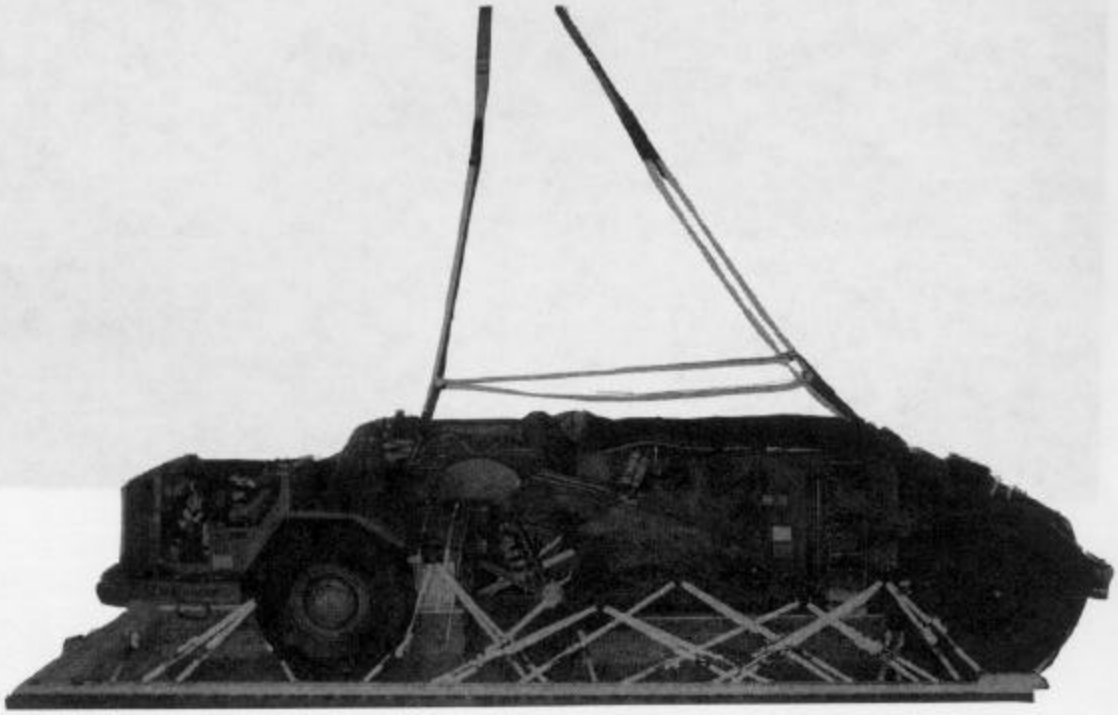

(1) Install a deadman's tie 13 inches above the highest point of the load.

Figure 3-33. Suspension slings safetied

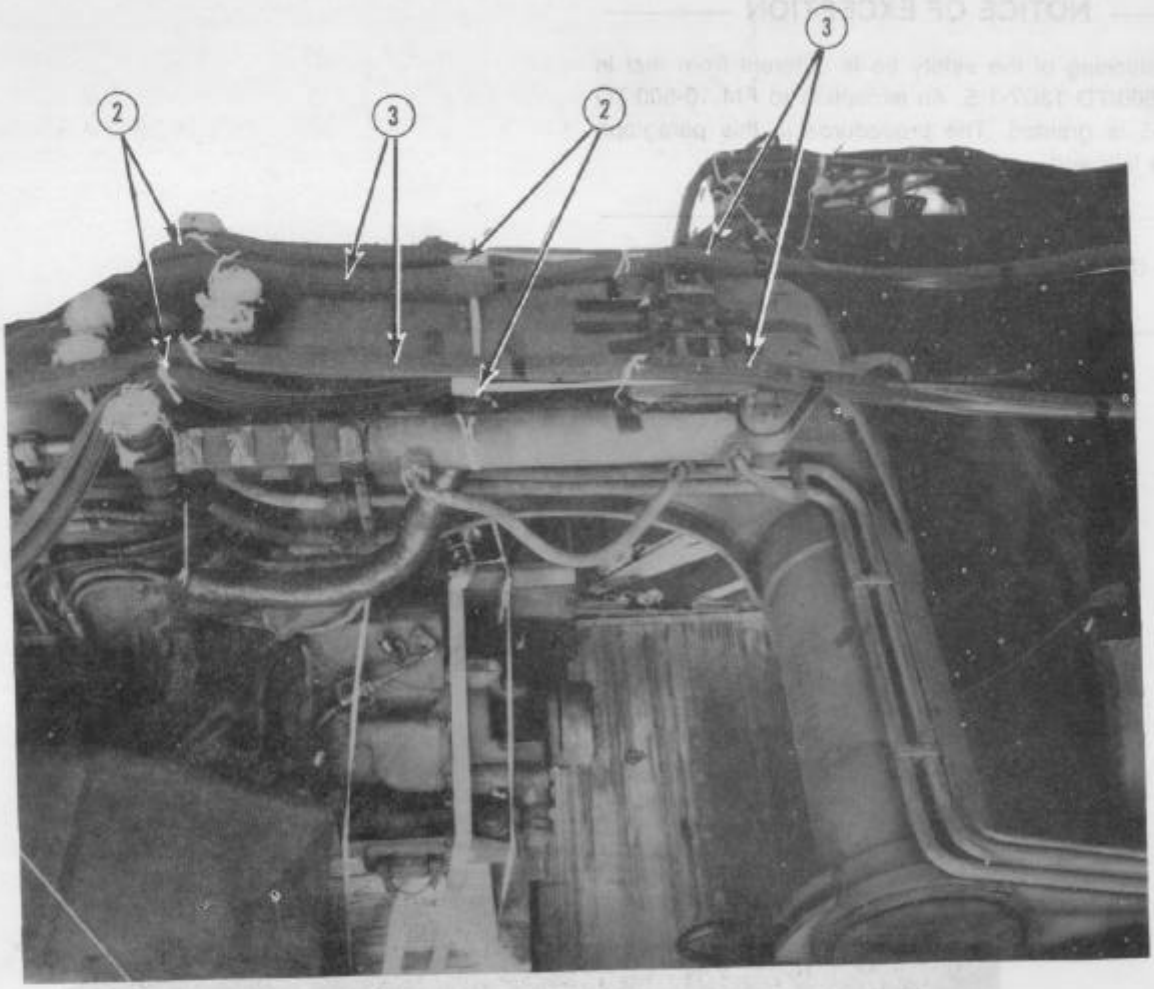

(2) Pass the rear suspension slings to the rear of the load. Make sure the padding does not come above the steering assembly. Keeping the slings as tight as possible, tie the slings to the hydraulic cylinders and the steering assembly arms with one turn double of type I, 1/4-inch cotton webbing.

(3) Pass the front suspension slings to the rear of the load and over the steering assembly. Tie the slings to the plate assembly and steering assembly arms with one turn double of type I, 1/4-inch cotton webbing.

Figure 3-33. Suspension slings safetied (continued)

3-9. Installing Parachute Release Stowage Platform

Install the platform as shown in Figure 3-34.

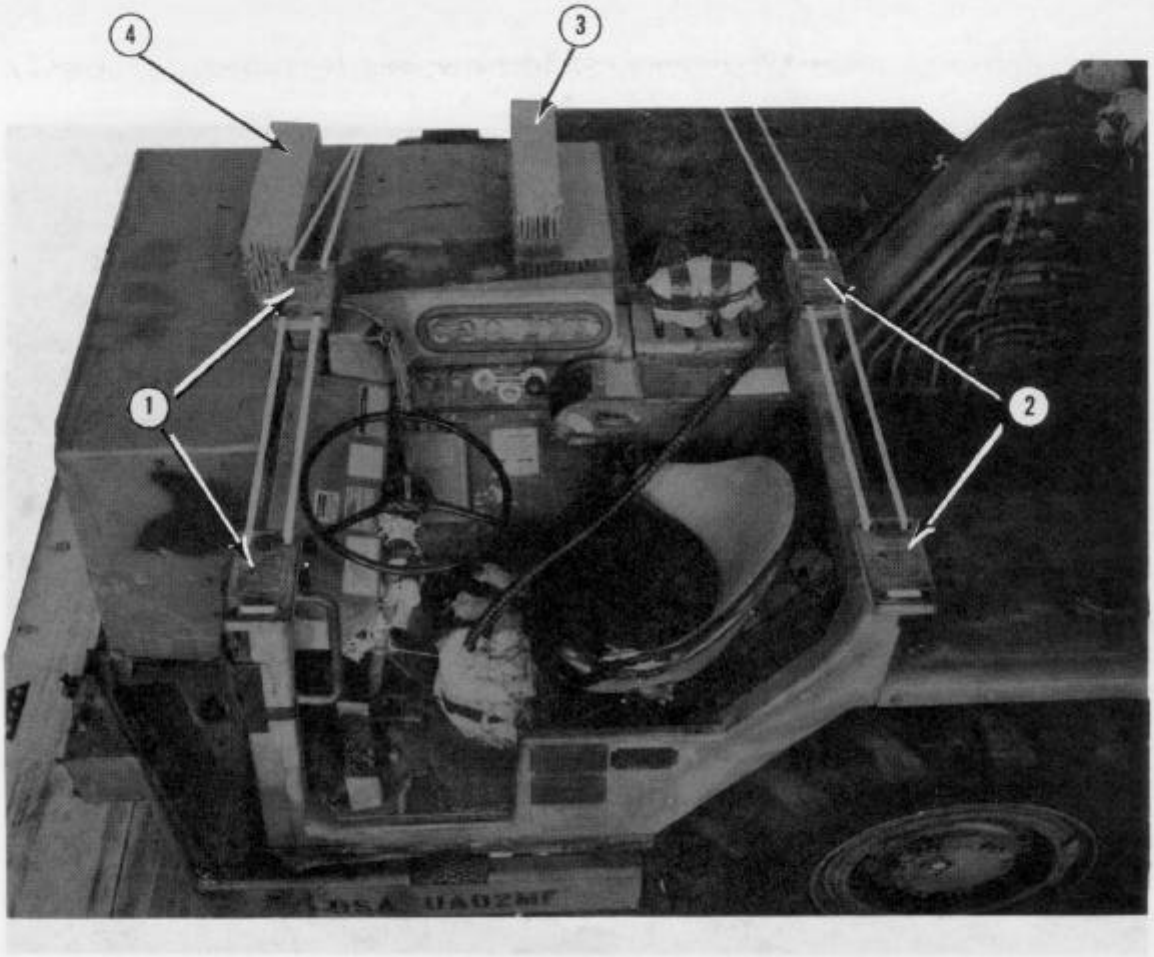

(1) Pass a length of 1/2-inch tubular nylon webbing through the vehicle's front ROPS mounting holes and over the vehicle. Tie it to clevis 24A.

(2) Pass a length of 1/2-inch tubular nylon webbing through the vehicle's rear ROPS mounting holes and over the vehicle. Tie it to clevis 22A.

(3) Place a 10- by 21-inch piece of honeycomb on the vehicle beside the operator compartment. Place two 5- by 21-inch pieces of honeycomb on top of the other piece of honeycomb flush with its rear edge.

(4) Place three pieces of 5- by 21-inch honeycomb on the operator compartment at the front post of the ROPS.

Figure 3-34. Parachute release stowage platform installed

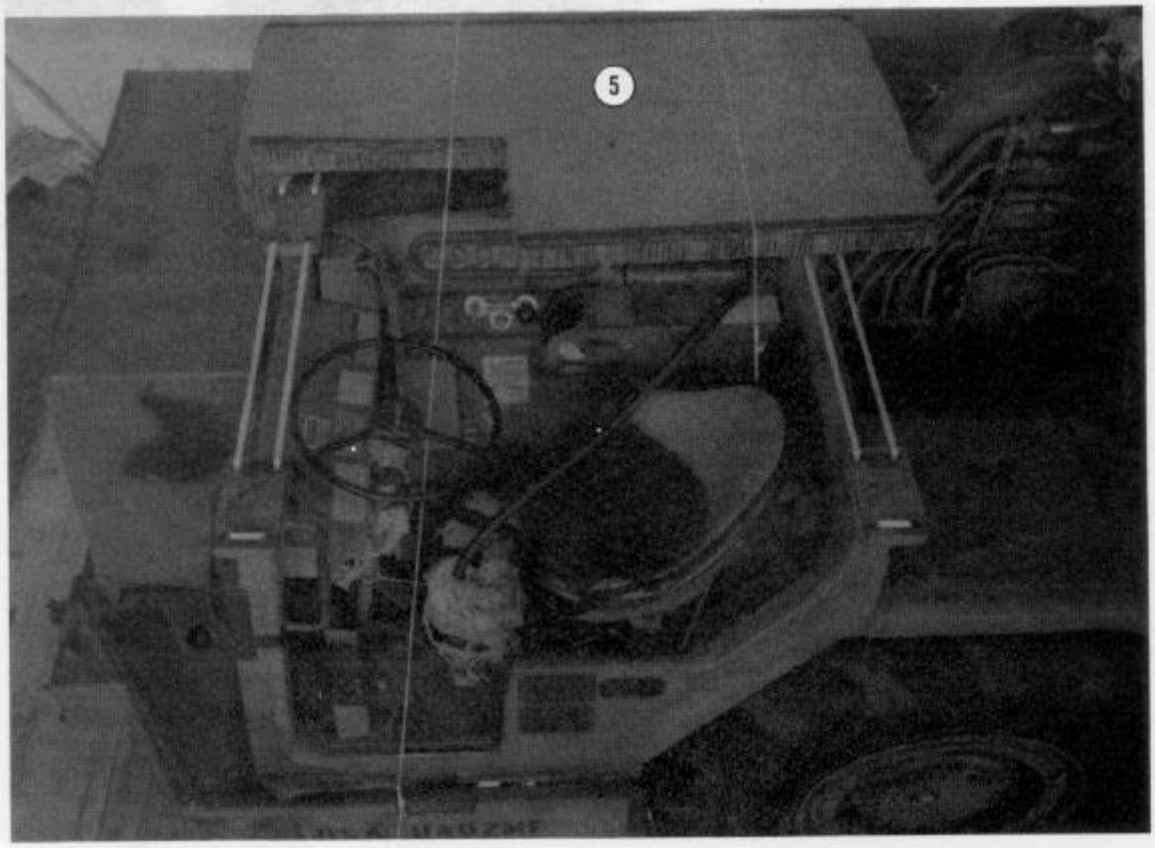

(5) Make a 15- by 24-inch cutout in the corner of a 36- by 62-inch piece of honeycomb. Place the honeycomb on top of the honeycomb positioned in steps 3 and 4. Tie the honeycomb in place with type III nylon cord. Tape the edges of the honeycomb where the type III nylon cord touches.

Figure 3-34. Parachute release stowage platform installed (continued)

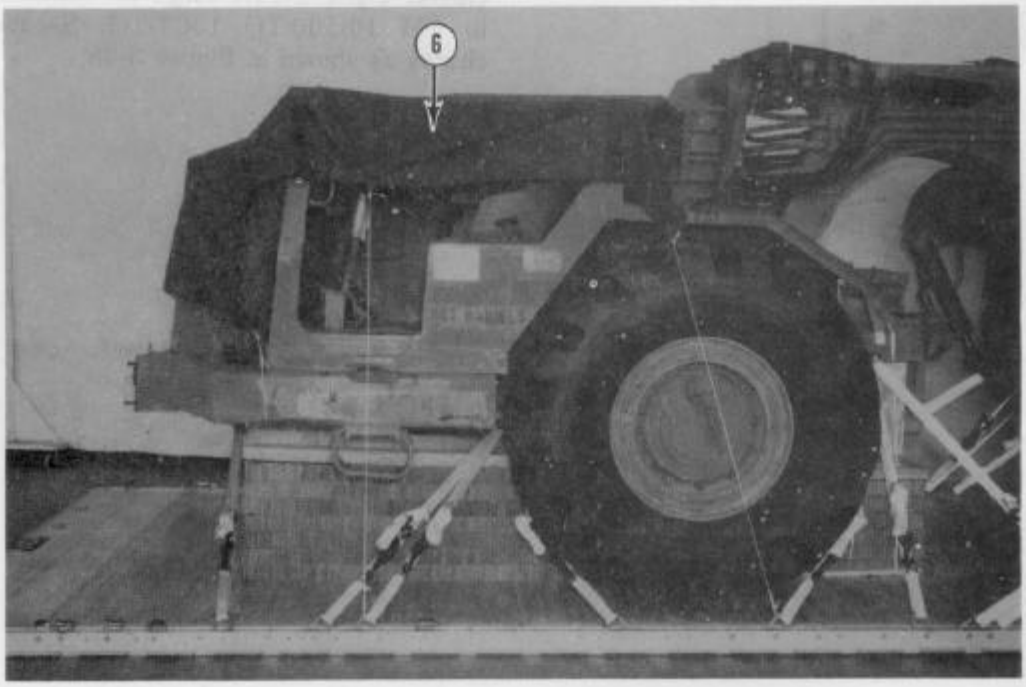

(6) Place a 10- by 10-foot piece of cotton duck cloth over the operator compartment. Tie it in place with type III nylon cord.

Figure 3-34. Parachute release stowage platform installed (continued)

3-10. Stowing Cargo Parachutes

Build and install the parachute stowage platform, and stow the cargo parachutes as described below.

a. Building Parachute Stowage Platform. Build a platform as shown in Figures 3-35 and 3-36.

CAUTION

Be sure to use a generous amount of nails when constructing the parachute stowage platform. The stowage platform will be supporting 2,240 pounds of parachutes.

b. Installing Parachute Stowage Platform. Install the platform as shown in Figure 3-37.

c. Stowing Parachutes. Prepare, position, and cluster eight G-11A cargo parachutes as outlined in FM 10-500/TO 13C7-1-5. Secure the parachutes as shown in Figure 3-38.

Notes

1. *These drawings are not drawn to scale.*
2. *Holes must be drilled after stowage platform is assembled.*
3. *All dimensions are given in inches.*
4. *Circled numbers refer to item numbers.*

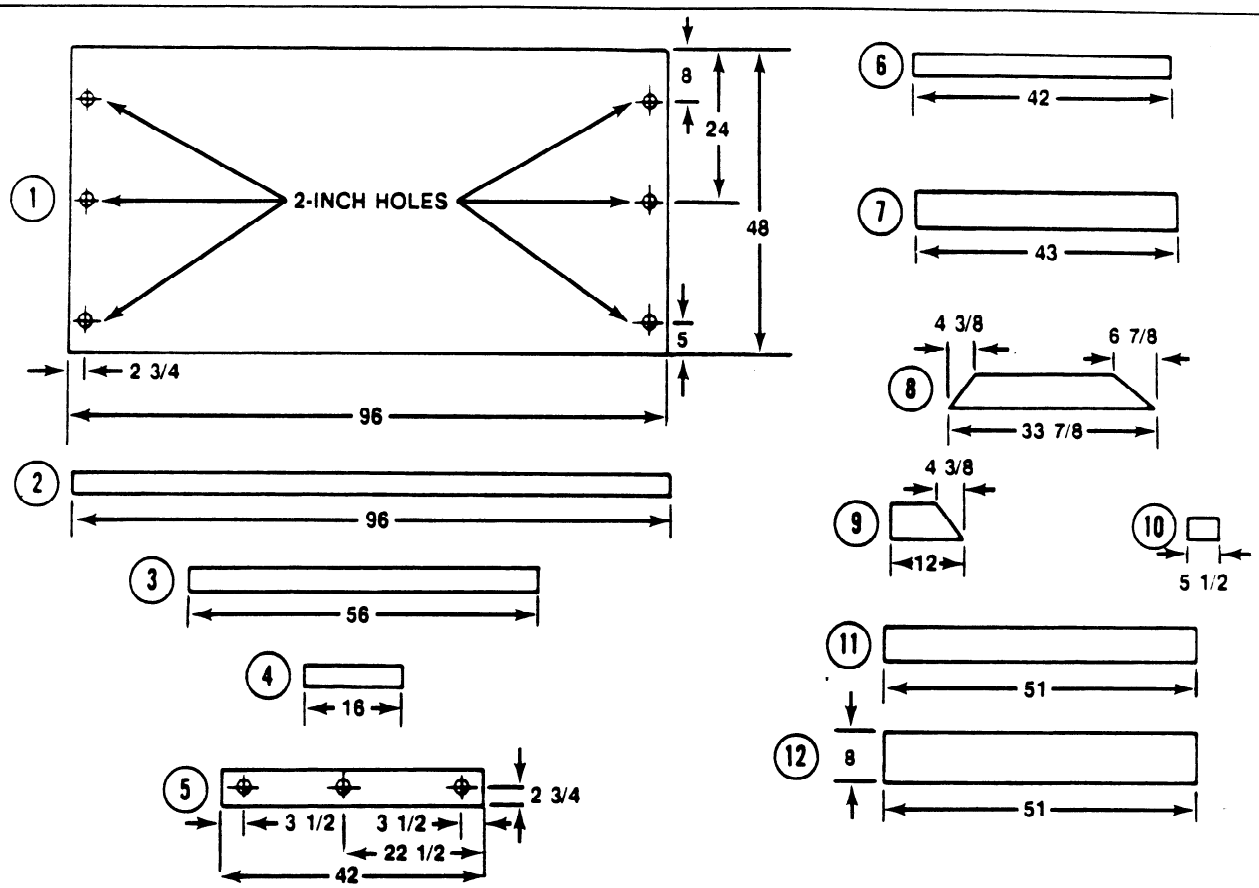

Item Number	Pieces	Width (Inches)	Length (Inches)	Material
1	1	96	48	3/4-inch plywood
2	2	96	3 1/2 (actual)	2- by 4-inch lumber
3	2	56	3 1/2 (actual)	2- by 4-inch lumber
4	4	16	3 1/2 (actual)	2- by 4-inch lumber
5	4	42	5 1/2 (actual)	2- by 6-inch lumber
6	3	42	3 1/2 (actual)	2- by 4-inch lumber
7	4	43	5 1/2 (actual)	2- by 6-inch lumber
8	2	33 7/8	5 1/2 (actual)	2- by 6-inch lumber
9	4	12	5 1/2 (actual)	2- by 6-inch lumber
10	2	5 1/2	3 1/2 (actual)	2- by 4-inch lumber
11	1	51	5 1/2 (actual)	2- by 6-inch lumber
12	1	51	8	3/4-inch plywood

Figure 3-35. Material required for parachute stowage platform

Notes

1. *These drawings are not drawn to scale.*
2. *All dimensions are given in inches.*

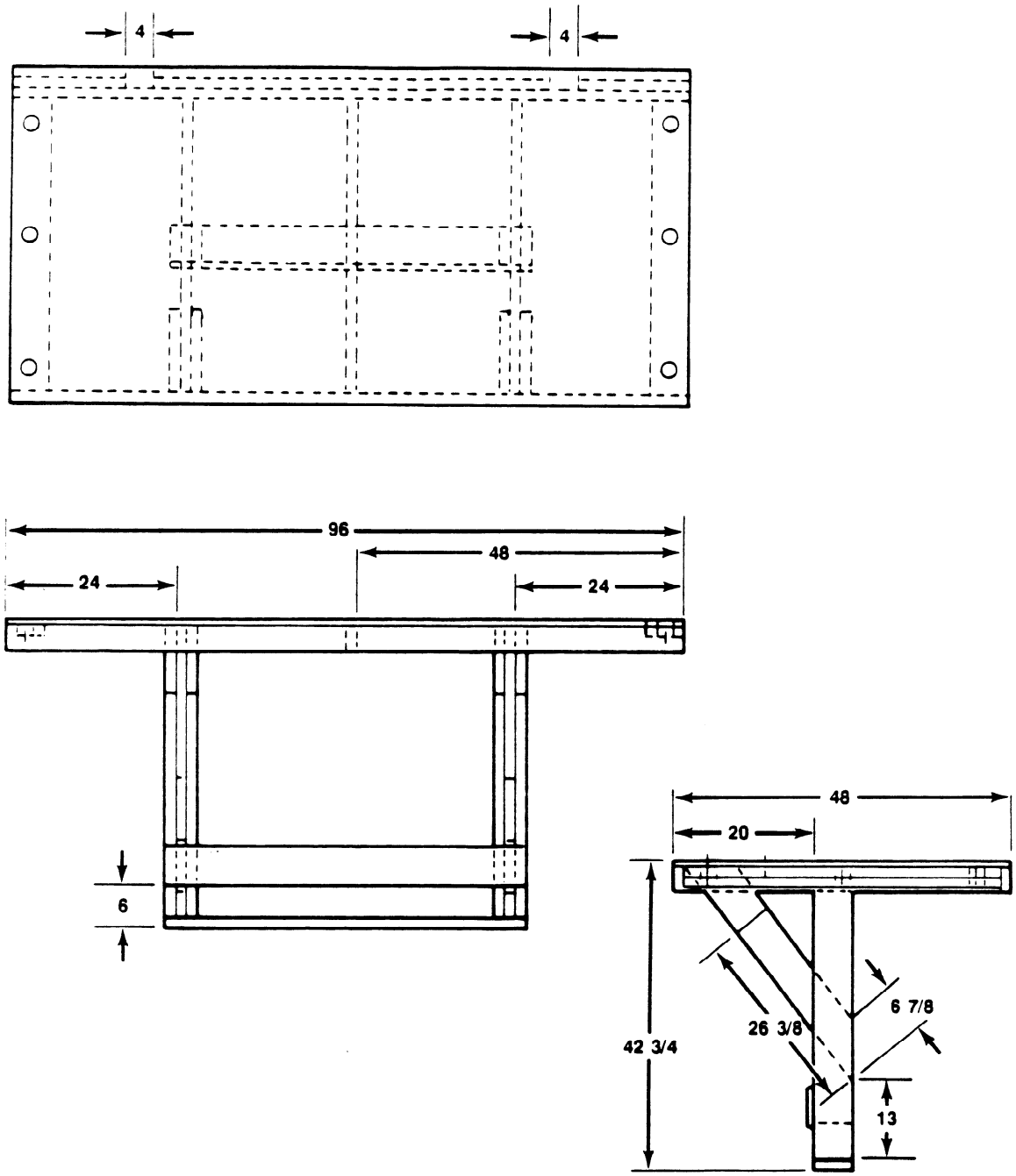

Figure 3-36. Parachute stowage platform constructed

Notes

1. *These drawings are not drawn to scale.*
2. *Parachute stowage platform legs may require adjustment.*
3. *Circled numbers refer to item numbers in Figure 3-35.*

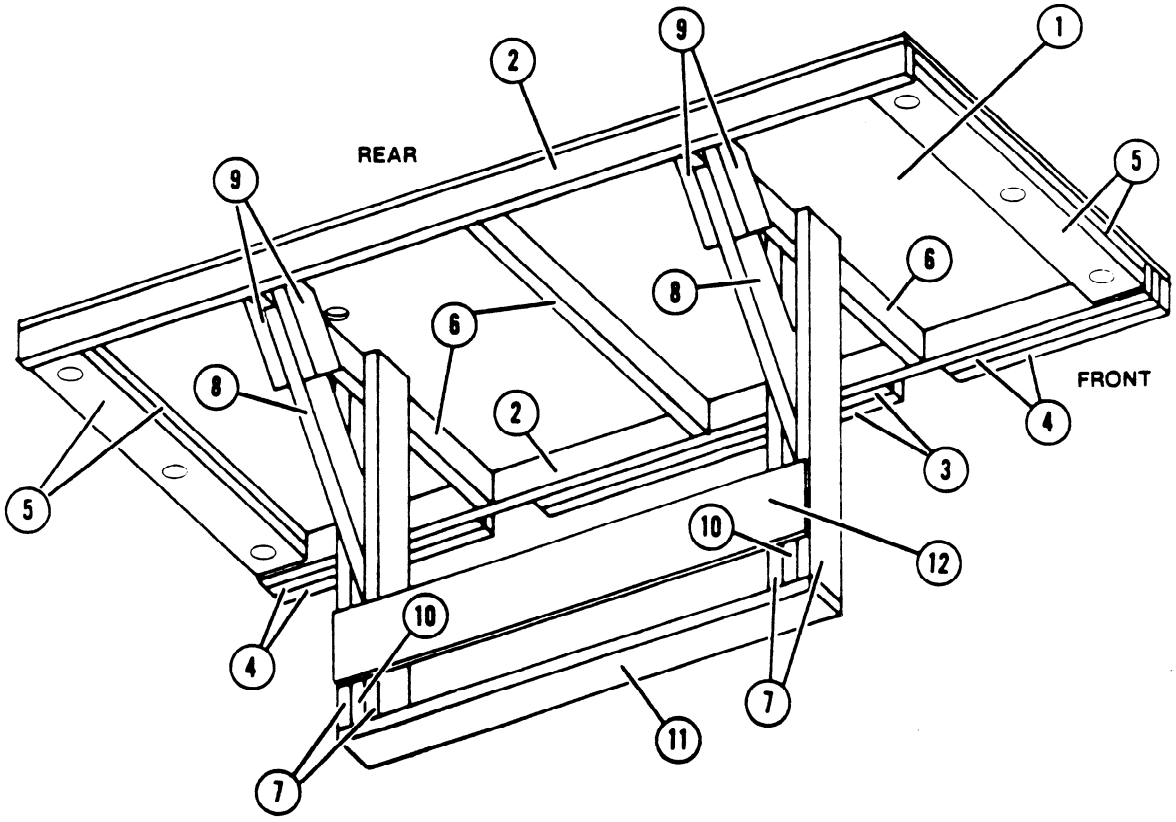

PERSPECTIVE VIEW

Step:

1. Construct the parachute stowage platform as shown.
2. Secure the plywood and lumber in place as shown with eightpenny, tenpenny, and sixteen-penny nails.

Figure 3-36. Parachute stowage platform constructed (continued)

Note

These drawings are not drawn to scale.

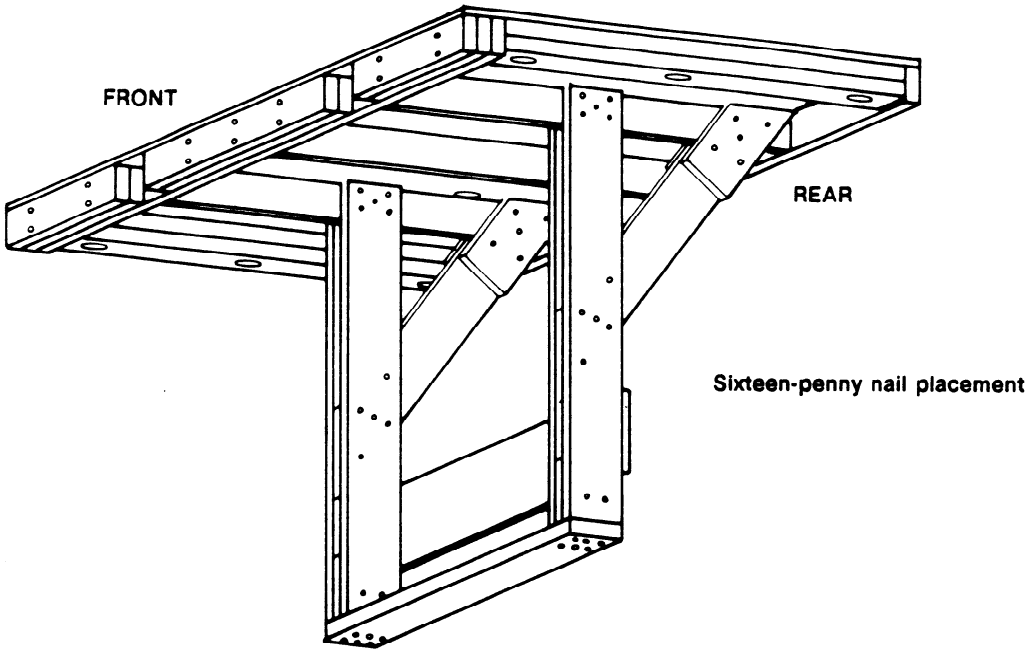

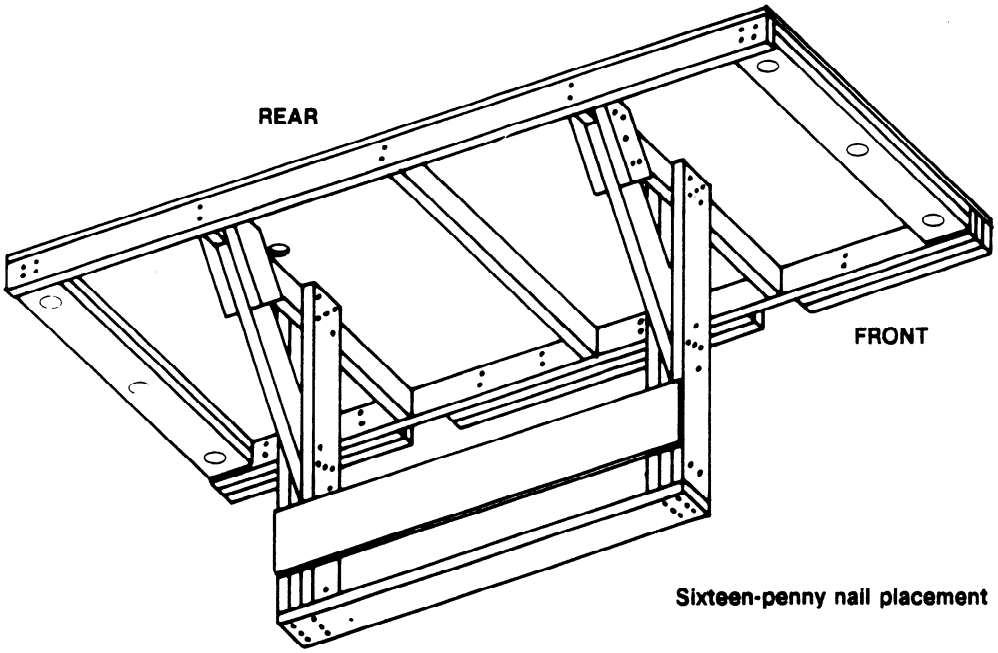

Figure 3-36. Parachute stowage platform constructed (continued)

Note

These drawings are not drawn to scale.

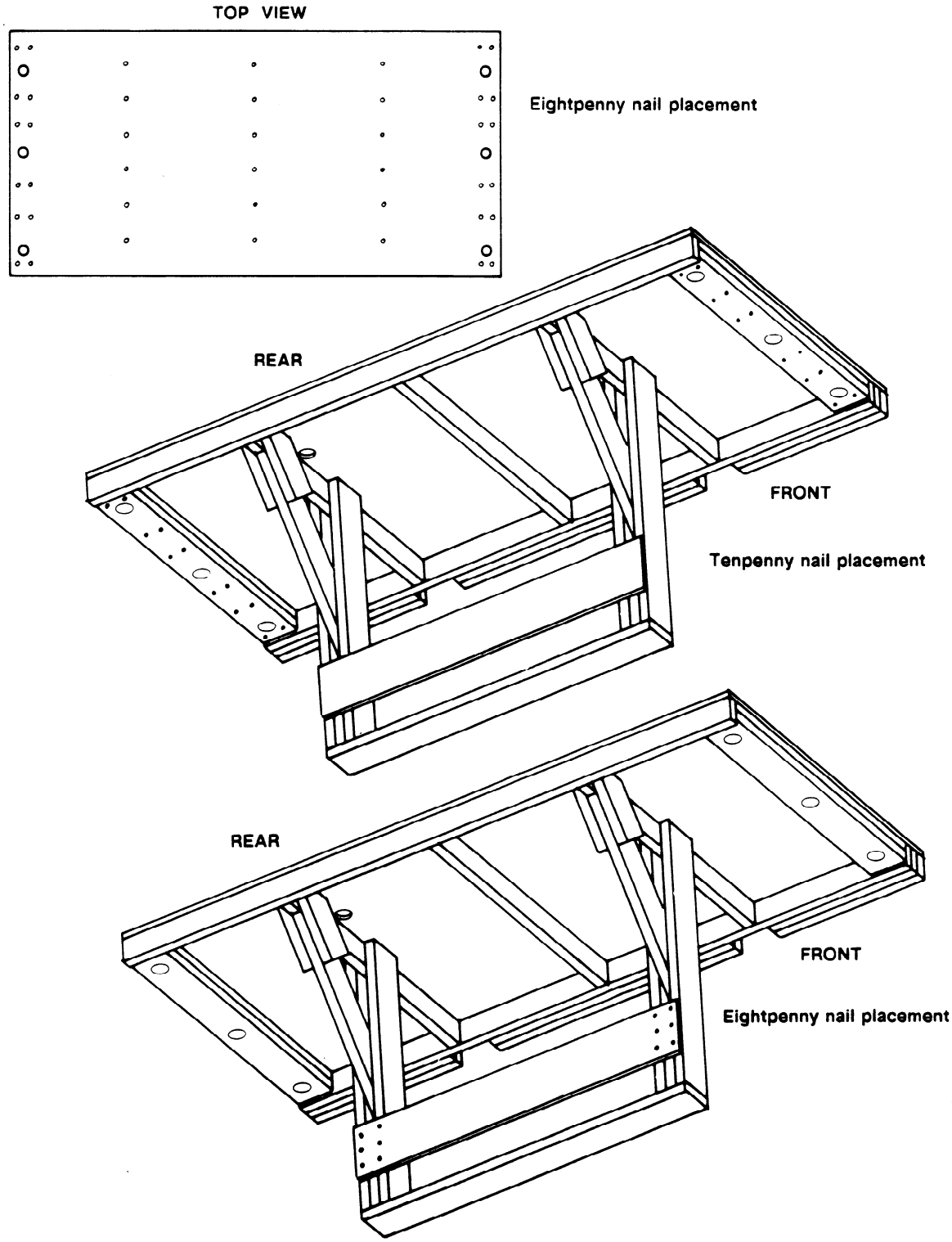

Figure 3-36. Parachute stowage platform constructed (continued)

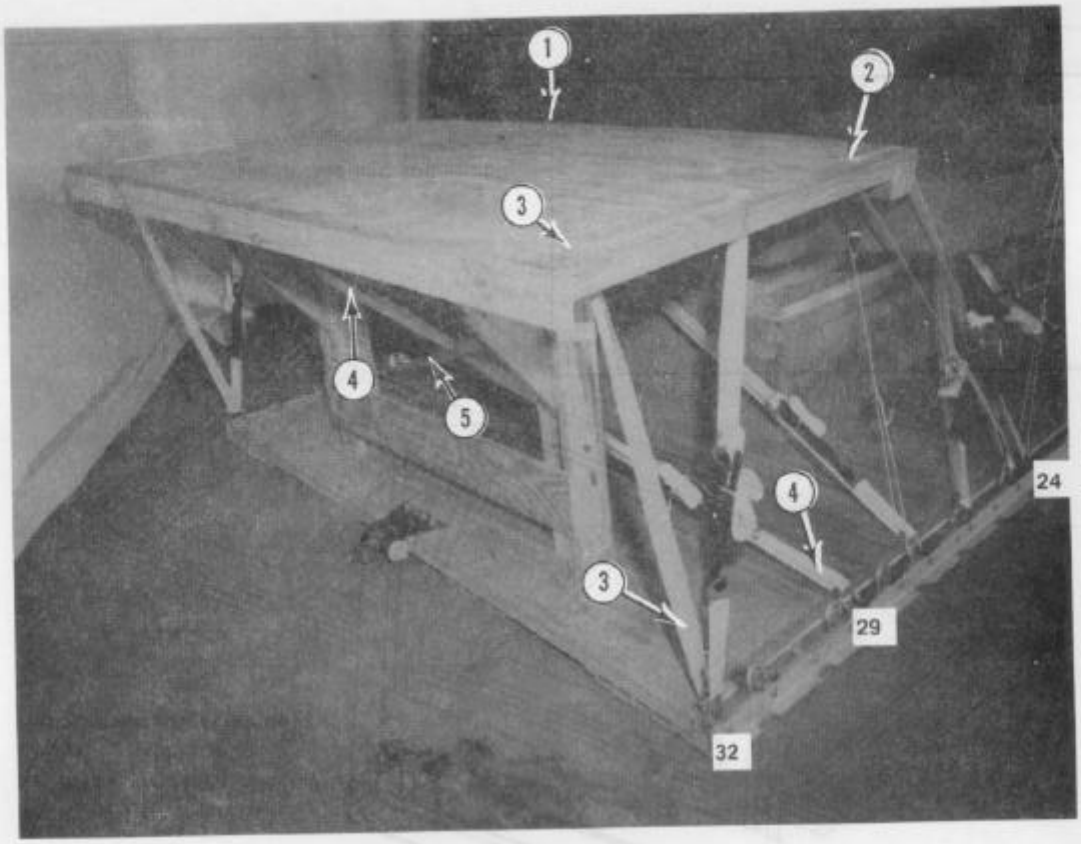

(1) Set the parachute stowage platform on the rear of the platform flush against the vehicle and on top of the bumper.

(2) Pass a 15-foot tiedown strap through clevis 24 and up through the front hole in the stowage platform. Bind the ends together with a D-ring and a load binder. Repeat for the left side using clevis 24A.

(3) Pass a 15-foot tiedown strap through clevis 32, up through the rear hole, and down through the center hole. Bind the ends together with a D-ring and a load binder. Repeat for the left side using clevis 32A.

(4) Pass a 15-foot tiedown strap through clevis 29 and around the left upright brace. Bind the ends with a D-ring and a load binder.

(5) Pass a 15-foot tiedown strap through clevis 29A and around the right upright brace. Bind the ends with a D-ring and a load binder.

Figure 3-37. Parachute stowage platform installed and secured

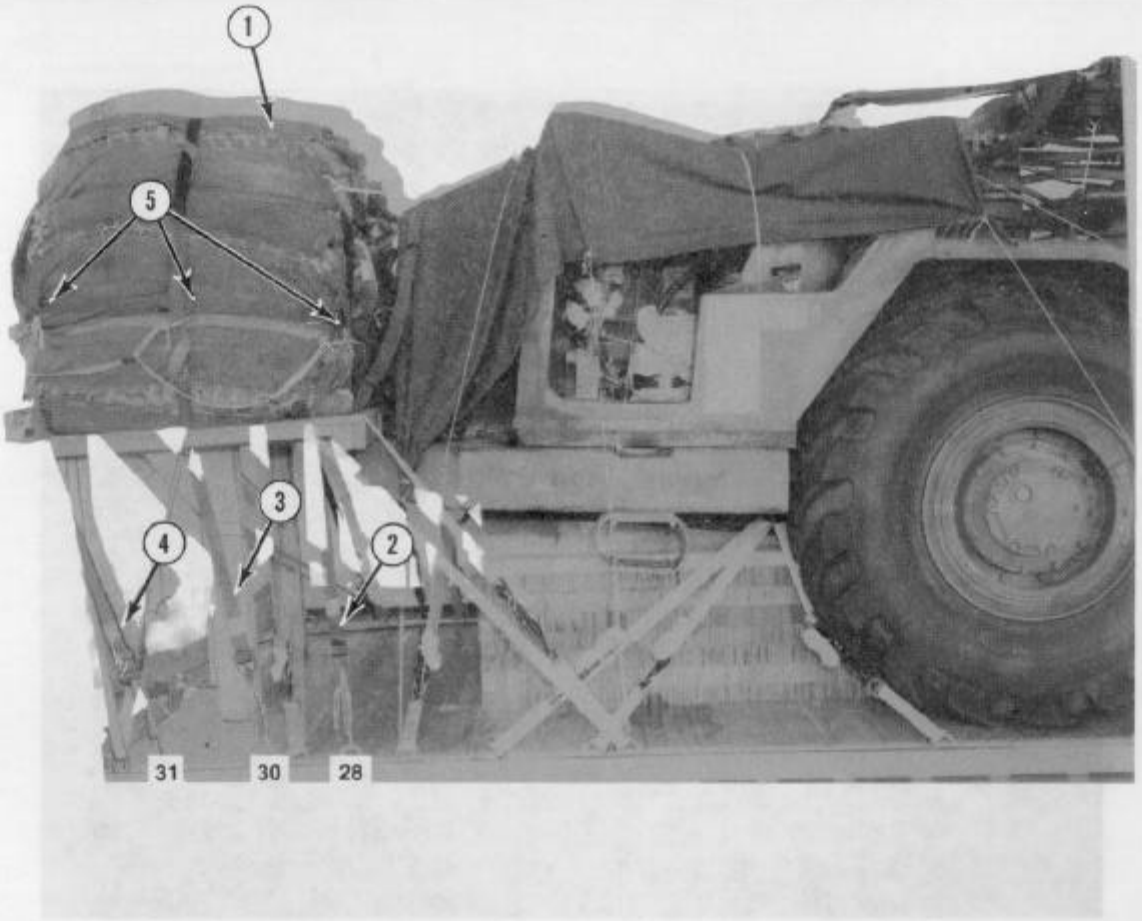

1. Place eight G-11C cargo parachutes on the platform, and secure them with three lengths of type X nylon webbing according to FM 10-500/TO 13C7-1-5.
2. Fasten the first strap to clevises 28 and 28A.
3. Fasten the second strap to clevises 30 and 30A.
4. Fasten the third strap to clevises 31 and 31A. Safety tie the D-rings and load binders according to FM 10-500/TO 13C7-1-5.
5. Install two multicut parachute release straps according to FM 10-500/TO 13C7-1-5.

Figure 3-38. Cargo parachutes stowed

3-11. Installing Extraction System

Inspect, assemble, and install the components of the EFTC according to FM 10-500/TO 13C7-1-5 and as shown in Figure 3-39.

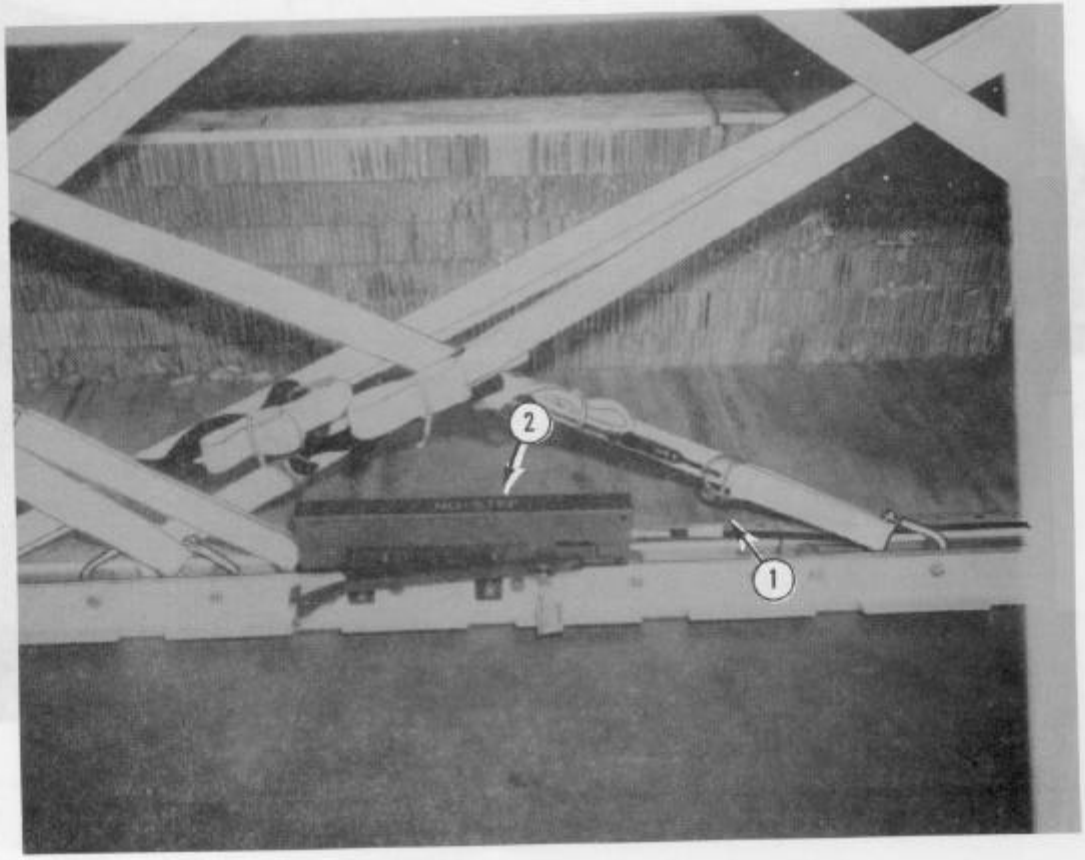

(1) Bolt the actuator mounting bracket to the third set of EFTC bracket holes on the left platform side rail.

Note

This platform has three sets of mounting holes. The third set of holes is 120 inches from the front of the platform.

(2) Attach a 24-foot cable to the actuator. Install the actuator to the EFTC mounting bracket, according to FM 10-500/TO 13C7-1-5.

Figure 3-39. Extraction system installed

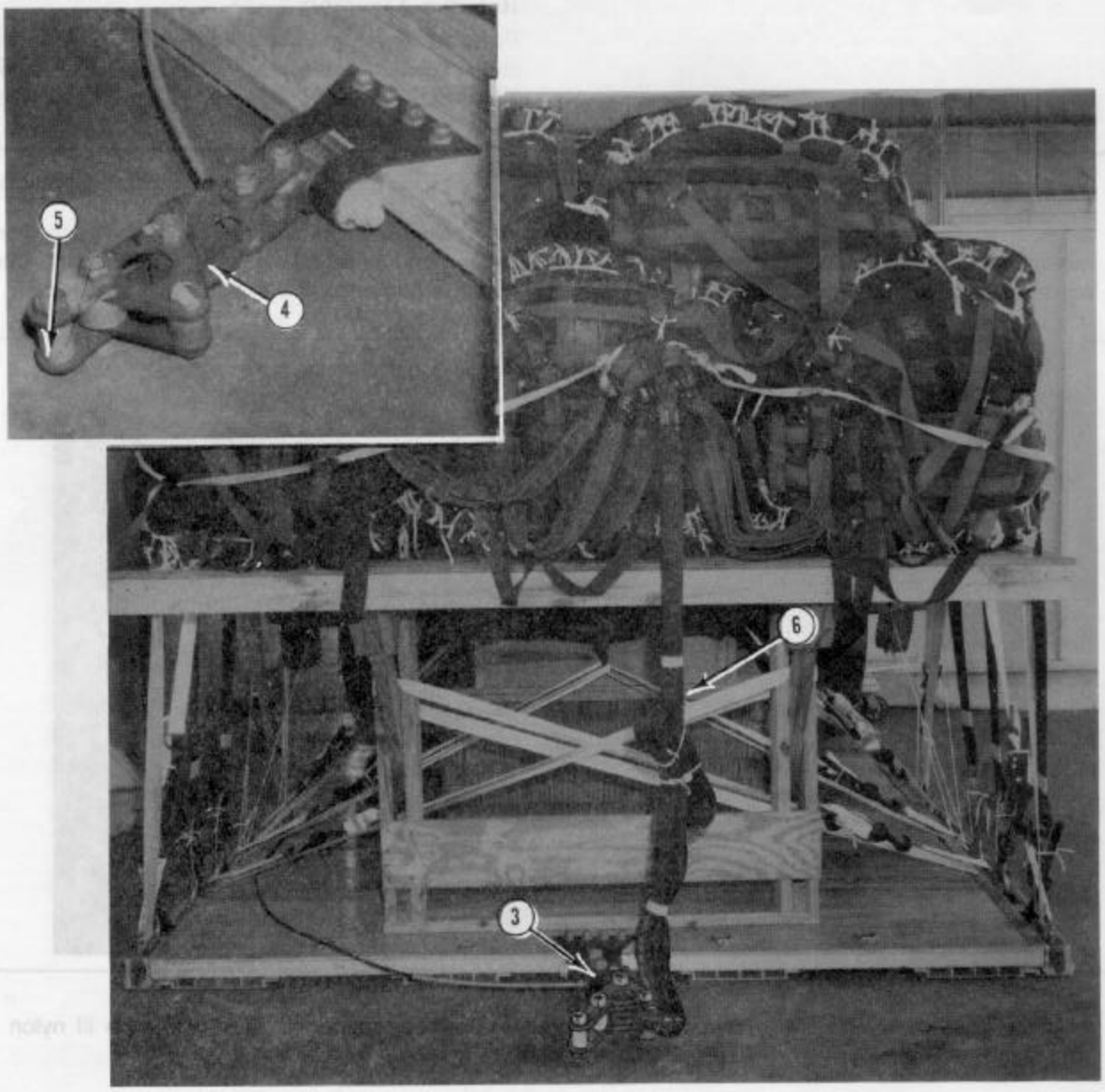

(3) Connect the cable to the latch assembly according to FM 10-500/TO 13C7-1-5.

(4) Install the latch assembly on the platform extraction bracket according to FM 10-500/TO 13C7-1-5.

(5) Install a link assembly adapter on the latch assembly using a 3-inch spacer in the free end.

(6) Install a 9-foot (4-loop), type XXVI nylon deployment line according to FM 10-500/TO 13C7-1-5.

Figure 3-39. Extraction system installed (continued)

3-12. Installing Parachute Release Assembly

Prepare and install a modified M-2 cargo parachute release assembly according to FM 10-500/ TO 13C7-1-5 and as shown in Figure 3-40.

CAUTION

Be sure to use a modified M-2 cargo parachute release assembly for the 42K extraction system. The modified M-2 release assembly includes strengthened components as follows: one toggle shaft, four hardened sleeve bolts, four 2 3/8-inch steel spacers, and two hardened clevis bolts with sleeves.

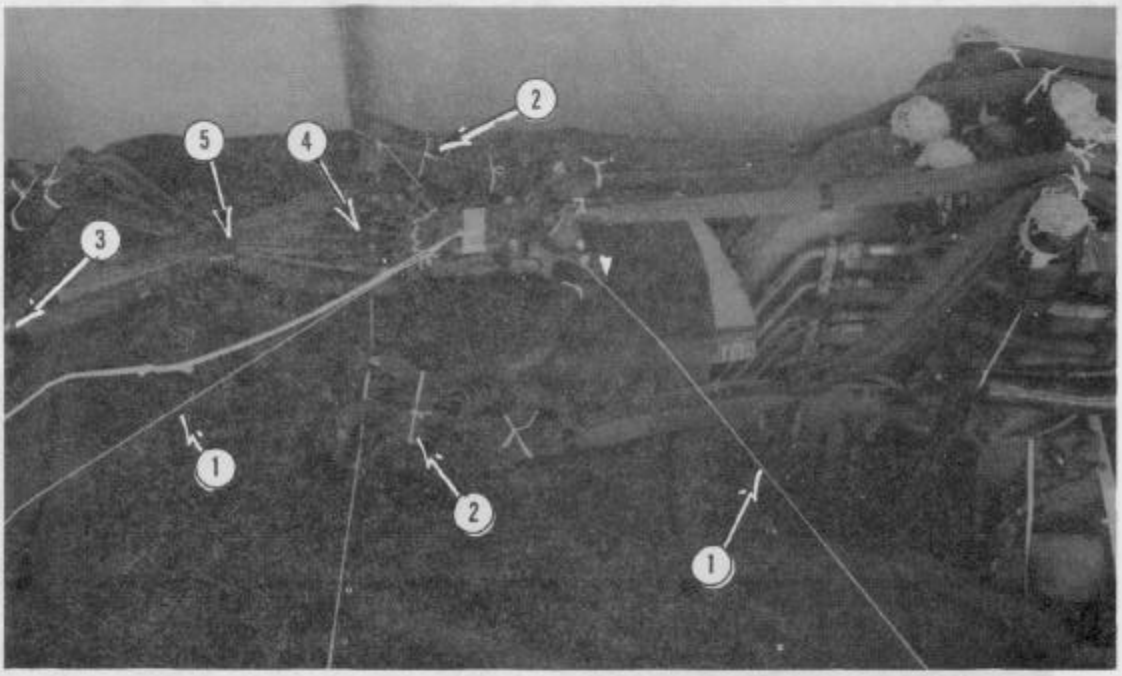

(1) Place the modified M-2 release on the parachute release platform. Tie it with type III nylon cord from clevises 21 to 21A and from clevises 27 to 27A.

(2) Fold and safety the front suspension slings with single turns of type I, 1/4-inch cotton webbing.

(3) Safety the parachute risers about 3 feet in front of the parachute bags with two lengths of type I, 1/4-inch cotton webbing.

(4) Tape the loops of the parachute risers individually with three complete turns of cloth-backed tape.

(5) Tape all of the parachute risers together about 18 inches from the taped loops with three complete turns of cloth-backed tape.

Figure 3-40. Parachute release assembly installed

3-13. Placing Extraction Parachutes

Place the extraction parachutes as given below.

a. C-130 Aircraft. Place two 28-foot, heavy-duty cargo extraction parachutes and a 60-foot (6-loop), type XXVI nylon webbing extraction line and sling/extraction line panel on this load for installation in the aircraft.

b. C-141 Aircraft. Place two 28-foot, heavy-duty cargo extraction parachutes and a 120-foot (6-loop), type XXVI nylon webbing extraction line and sling/extraction line panel on this load for installation in the aircraft.

3-14. Installing Provisions for Emergency Restraints

Install provisions for emergency restraints when the water distributor is to be airdropped from a C-141 aircraft. Install the provisions for the emergency restraints as shown in Figure 3-41.

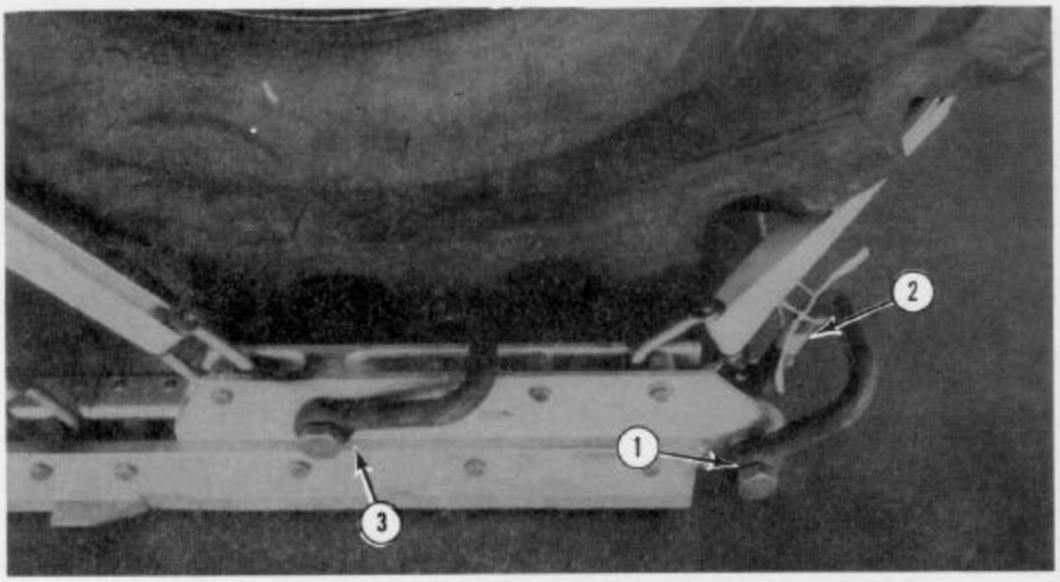

(1) Bolt a large clevis to the front hole of each tandem link. Use spacers on either side of the tandem link.

(2) Safety the clevises to lashings 1 and 2 with type I, 1/4-inch cotton webbing.

(3) Bolt a large clevis to the remaining large hole on each tandem link.

Figure 3-41. Provisions for emergency restraints installed

3-15. Marking Rigged Load

Mark the rigged load according to FM 10-500/TO 13C7-1-5 and as shown in Figure 3-42. Complete DD Form 1387-2 (Special Handling Data/Certification), and securely attach it to the load. Indicate on DD Form 1387-2 that the vehicle fuel tank and the batteries have been prepared according to AFR 71-4/TM 38-250. If the load varies from that shown, the weight, height, and CB must be recomputed.

3-16. Equipment Required

Use the equipment listed in Table 3-1 to rig this load.

NOTICE OF EXCEPTION

The rigged load weight of both vehicles exceeds the maximum allowable rigged weight in FM 10-500/TO 13C7-1-5. An exception to FM 10-500/TO 13C7-1-5 is granted. This exception does not apply to C-130 aircraft with an aircraft serial number (tail number) of 62-1783 or lower.

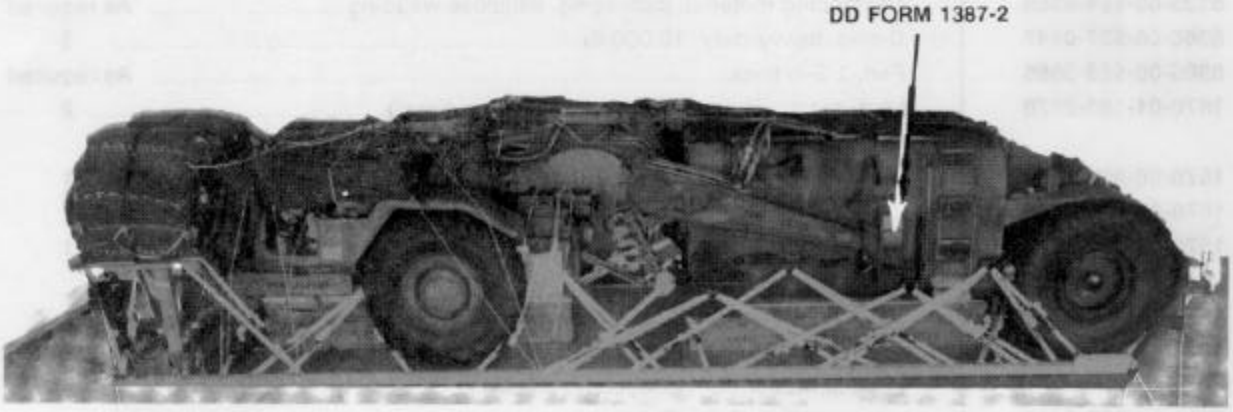

RIGGED LOAD DATA

		TYPE I	TYPE II
Weight:	*Load shown*	37,350 pounds	37,800 pounds
	Maximum load allowed	38,500 pounds	38,500 pounds
Height		100 inches	100 inches
Width		108 inches	108 inches
Length		436 inches	436 inches
Overhang:	*Front*	36 inches	36 inches
	Rear	16 inches	16 inches
CB (from front edge of platform)		177 inches	181 inches
Extraction System		EFTC	EFTC

Figure 3-42. The 613WD water distributor rigged for low-velocity airdrop on a type V airdrop platform

Table 3-1. Equipment required for rigging the 613WD water distributor for low-velocity airdrop on a type V platform

National Stock Number	Item	Quantity
1670-00-162-4979	Adapter, link assembly	1
8040-00-273-8713	Adhesive, paste, 1-gal	As required
4030-00-432-2516	Clevis, screw-pin	4
	Clevis, suspension:	
4030-00-678-8562	3/4-in (medium)	2
4030-00-090-5354	1-in (large)	6
8305-00-242-3593	Cloth, cotton duck, 60-in	As required
4020-00-240-2146	Cord, nylon, type III, 550-lb	As required
1670-00-434-5782	Coupling, airdrop, extraction force transfer, w 24-ft cable	1
1670-00-360-0328	Cover, clevis, large	1
8135-00-664-6958	Cushioning material, packaging, cellulose wadding	As required
5365-00-937-0147	D-ring, heavy-duty, 10,000-lb	3
8305-00-958-3685	Felt, 1/2-in thick	As required
1670-01-183-2678	Leaf, extraction line (sling/extraction line panel)	2
	Line, extraction, type XXVI nylon webbing:	
1670-00-003-1957	60-ft (6-loop) (for C-130) ***or***	1
1670-01-064-4454	60-ft (6-loop) (for C-130)	1
1670-01-062-6312	120-ft (6-loop) (for C-141)	1
	Link assembly:	
1670-00-006-2752	Four-point	1
1670-00-783-5988	Type IV	2
	Load spreader (for honeycomb stack 1):	
5510-00-220-6448	Lumber, 2- by 6- by:	
	6-in	2
	12-in	2
	24-in	2
	30-in	6
5530-00-128-4981	Plywood, 3/4-in:	
	6- by 6-in	1
	6- by 24-in	1
	48- by 24-in	3
	Load spreader (for honeycomb stack 4):	
5510-00-220-6448	Lumber, 2- by 6- by:	
	18-in	1
	29 3/8-in	1
	32 1/2-in	1
	37 1/2-in	1
5530-00-129-7721	Plywood, 1/4- by 40- by 32-in	1
5530-00-128-4981	Plywood, 3/4-in:	
	24- by 19-in	3
	24 7/8- by 19-in	3
	37 1/2- by 24-in	1
	40- by 32-in	2

Table 3-1. Equipment required for rigging the 613WD water distributor for low-velocity airdrop on a type V platform (continued)

National Stock Number	Item	Quantity
	Load spreader (for honeycomb stack 6):	
5510-00-220-6246	Lumber, 2- by 8- by:	
	33-in	1
	50-in	4
5530-00-128-4981	Plywood, 3/4- by 48- by 60-in	3
5510-00-220-6146	Lumber, 2- by 4- by 12-in	1
	Nail, steel wire, common:	
5315-00-010-4659	8d	As required
5315-00-010-4661	10d	As required
5315-00-010-4663	16d	As required
1670-00-753-3928	Pad, energy-dissipating, honeycomb,	
	3- by 36- by 96-in:	16 sheets
	5- by 21-in	(5)
	10- by 21-in	(1)
	12- by 30-in	(2)
	18- by 18-in	(7)
	24- by 118-in	(12)
	36- by 62-in	(1)
	40- by 33-in	(6)
	48- by 24-in	(5)
	48- by 30-in	(1)
	48- by 60-in	(6)
	Parachute:	
1670-01-016-7841	Cargo, G-11C	8
1670-00-040-8135	Cargo extraction, 28-ft, heavy-duty	2
	Parachute stowage platform:	
5510-00-220-6146	Lumber, 2- by 4-in:	
	5 1/2-in	2
	16-in	4
	42-in	3
	56-in	2
	96-in	2
5510-00-220-6448	Lumber, 2- by 6-in:	
	12-in	4
	33 7/8-in	2
	42-in	4
	43-in	4
	51-in	1
5530-00-128-4981	Plywood, 3/4-in:	
	8- by 51-in	1
	96- by 48-in	1
	Platform, AD, type V, 32-ft:	1
	Bracket:	
1670-01-162-2375	Inside EFTA	(1)
1670-01-162-2374	Outside EFTA	(1)
1670-01-162-2372	Clevis, load tiedown	(64)

Table 3-1. Equipment required for rigging the 613WD water distributor for low-velocity airdrop on a type V platform (continued)

National Stock Number	Item	Quantity
1670-01-162-2376	Extraction bracket assembly	(4)
1670-01-162-2381	Tandem link	(2)
5530-00-128-4981	Plywood, 3/4- by:	
	12- by 18-in	1
	24- by 118-in	2
	48- by 32-in	1
1670-01-097-8817	Release, cargo parachute, M-2 (42K modified)	1
No NSN	Bolt, clevis (w/sleeves), hardened	(2)
No NSN	Sleeve bolts, hardened	(4)
No NSN	Spacers, steel, 2 3/8-in	(4)
No NSN	Toggle shaft, reinforced	(1)
	Sling, cargo, airdrop:	
	For deployment:	
1670-00-432-2501	9-ft (4-loop), type XXVI nylon webbing *or*	1
1670-01-062-6305	9-ft (4-loop), type XXVI nylon webbing	1
	For lifting:	
1670-00-432-2499	3-ft (4-loop), type XXVI nylon webbing *or*	2
1670-01-062-6306	3-ft (4-loop), type XXVI nylon webbing	2
1670-00-432-2501	9-ft (4-loop), type XXVI nylon webbing *or*	4
1670-01-062-6305	9-ft (4-loop), type XXVI nylon webbing	4
	For riser extension:	
1670-00-432-2494	120-ft (3-loop), type X nylon webbing *or*	8
1670-01-062-6311	120-ft (2-loop), type XXVI nylon webbing	8
	For suspension:	
1670-00-003-1956	20-ft (4-loop), type XXVI nylon webbing *or*	4
1670-01-064-4453	20-ft (4-loop), type XXVI nylon webbing	4
1670-00-432-2511	20-ft (4-loop), type XXVI nylon webbing	4
1670-00-040-8219	Strap, parachute release, multicut comes w 3 knives	2
7510-00-266-5016	Tape, adhesive, 2-in	As required
1670-00-937-0271	Tiedown assembly, 15-ft	52
	Webbing:	
8305-00-268-2411	Cotton, 1/4-inch, type I	As required
8305-00-082-5752	Nylon, tubular, 1/2-in, natural	As required