CHAPTER 5

RIGGING THE M998 CARGO/TROOP CARRIER WITH GRC/206 AIR FORCE PALLET ON A TYPE V PLATFORM

Section I

LOW-VELOCITY AIRDROP

5-1. Description of Load

The M998 cargo/troop carrier (Figure 5-1) is 180 inches long without a winch. The height is 83 1/2 inches, reducible to 71 1/2 inches. The width is 86 1/2 inches. The truck weighs 5,990 pounds with a radio equipment GRC/206 Air Force pallet. Other equipment included on the load is the 1.5-kilowatt, 28-VDC generator set; two cable spools; two 5-gallon fuel cans; and one 5-gallon water can. The truck weighs 6,940 pounds with 1/2 tank of fuel and the equipment installed. The load requires two G-11B or three G-11A cargo parachutes.

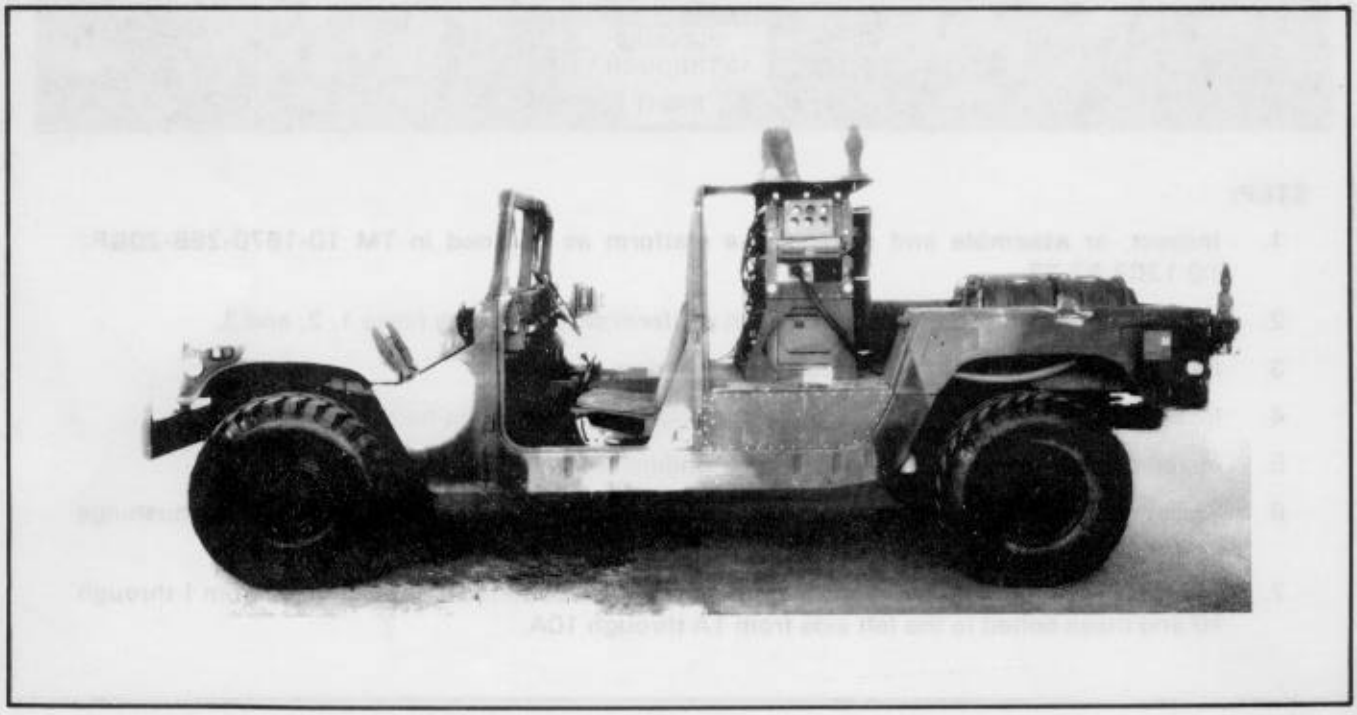

Figure 5-1. M998 cargo/troop carrier

5-2. Preparing Platform

Prepare a 16-foot, type V airdrop platform using four tandem links and 20 load tiedown clevises as shown in Figure 5-2.

NOTES: **1. The nose bumper may or may not be installed.**
2. Measurements given in this section are from the front edge of the platform, NOT from the front edge of the nose bumper.

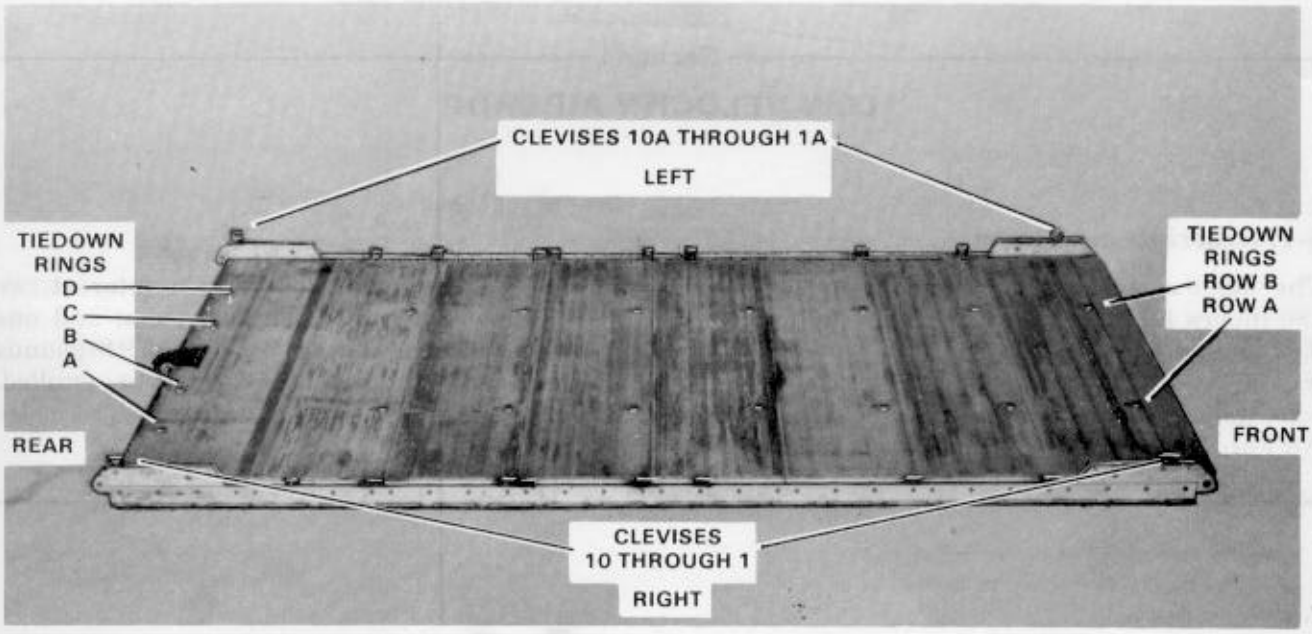

STEP:

1. Inspect, or assemble and inspect, the platform as outlined in TM 10-1670-268-20&P/TO 13C7-52-22.
2. Install a tandem link on the front of each platform side rail using holes 1, 2, and 3.
3. Install a clevis on bushing 2 on each front tandem link.
4. Install a tandem link on the rear of each platform side rail using holes 30, 31, and 32.
5. Install a clevis to bushing 4 on each rear tandem link.
6. Starting at the front of the platform, install clevises on each platform side rail using the bushings bolted on holes 5, 9, 15, 17, 20, 21, 25, and 27.
7. Starting at the front of the platform, number the clevises bolted to the right side from 1 through 10 and those bolted to the left side from 1A through 10A.

Figure 5-2. Platform prepared

5-3. Preparing and Positioning Honeycomb Stacks

Use the material in Table 5-1 to prepare three honeycomb stacks as shown in Figures 5-3 and 5-4. Position the stacks on the platform according to FM 10-500/TO 13C7-1-5 and as shown in Figures 5-5 and 5-6.

Table 5-1. Material needed to build honeycomb stacks

Stack Number	Pieces	Width (Inches)	Length (Inches)	Material	Instructions
1	1	80	24	Honeycomb	See Figure 5-3.
	4	54	24	Honeycomb	
	1	54	24	3/4-inch plywood	
	4	20	6	Honeycomb	
	1	20	24	Honeycomb	
	2	20	6	3/4-inch plywood	
2	2	42	10	Honeycomb	See Figure 5-4.
	8	12	22	Honeycomb	
	4	12	54	Honeycomb	
	5	10	10	Honeycomb	
	2	12	54	3/4-inch plywood	
	2	10	10	3/4-inch plywood	
	6	8	54	Honeycomb	
	2	8	54	3/4-inch plywood	
	2	6	24	Honeycomb	
	2	8	24	Honeycomb	
3	1	80	24	Honeycomb	See Figure 5-3.
	4	54	24	Honeycomb	
	1	54	24	3/4-inch plywood	
	4	20	6	Honeycomb	
	1	20	24	Honeycomb	
	2	20	6	3/4-inch plywood	

NOTE: This drawing is not drawn to scale.

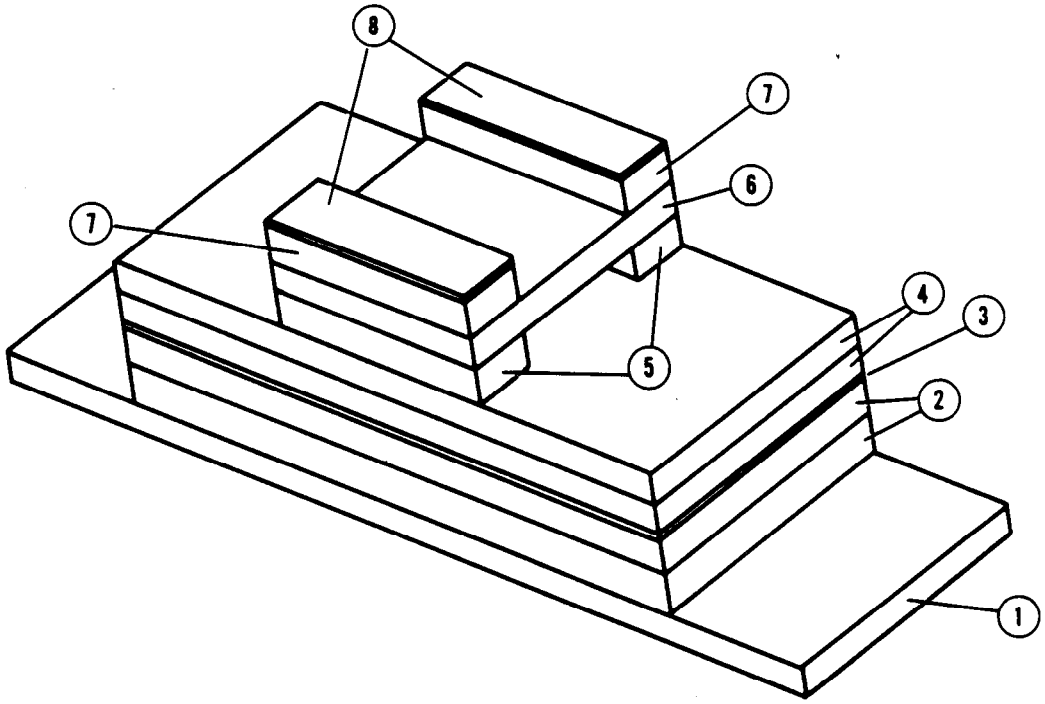

1. Use an 80- by 24-inch piece of honeycomb to form a base.
2. Center two 54- by 24-inch pieces of honeycomb on the base.
3. Place a 3/4- by 54- by 24-inch piece of plywood on top of the honeycomb placed in step 2 above.
4. Place two 54- by 24-inch pieces of honeycomb on the top of the plywood placed in step 3 above.
5. Center one 20- by 6-inch piece of honeycomb even with the front edge. Center one 20- by 6-inch piece of honeycomb even with the rear edge.
6. Place a 20- by 24-inch piece of honeycomb flush over the pieces of honeycomb placed in step 5 above to form a bridge.
7. Place one 20- by 6-inch piece of honeycomb flush with the front edge. Place one 20- by 6-inch piece of honeycomb flush with the rear edge.
8. Place a 3/4- by 20- by 6-inch piece of plywood on top of each piece of honeycomb placed in step 7 above.
9. Repeat steps 1 through 8 for stack 3.

Figure 5-3. Honeycomb stacks 1 and 2 prepared

NOTE: These drawings are not drawn to scale.

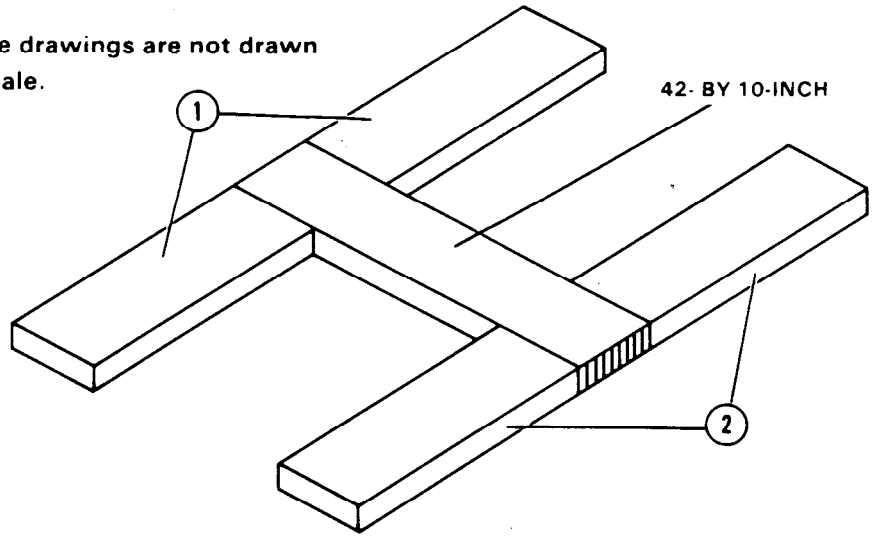

(1) Place two 12- by 22-inch pieces of honeycomb perpendicular to a 42- by 10-inch piece of honeycomb flush with one of its ends.

(2) Place two 12- by 22-inch pieces of honeycomb perpendicular to the other end of the 42- by 10-inch piece of honeycomb.

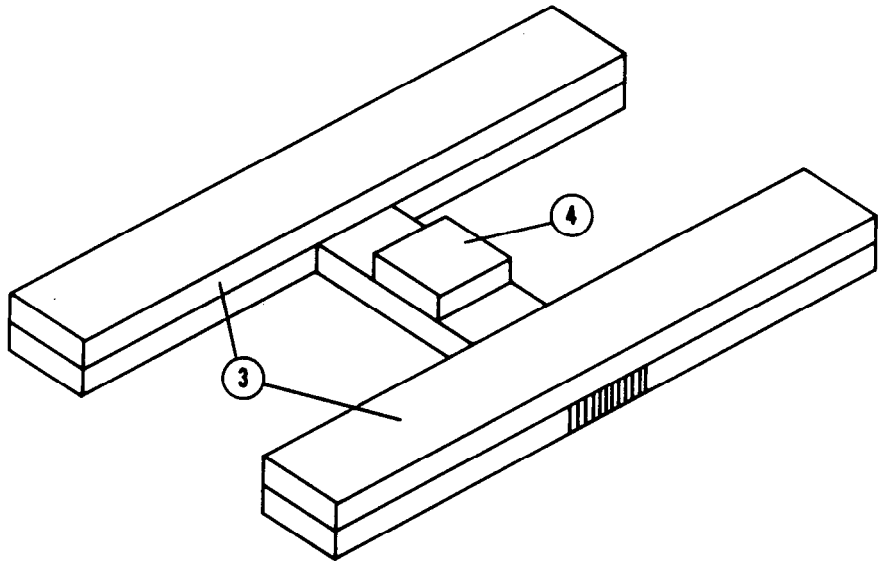

(3) Place a 12- by 54-inch piece of honeycomb on each side of the base.

(4) Center a 10- by 10-inch piece of honeycomb on the bridge placed in step 1 above.

Figure 5-4. Honeycomb stack 2 prepared

NOTE: These drawings are not drawn to scale.

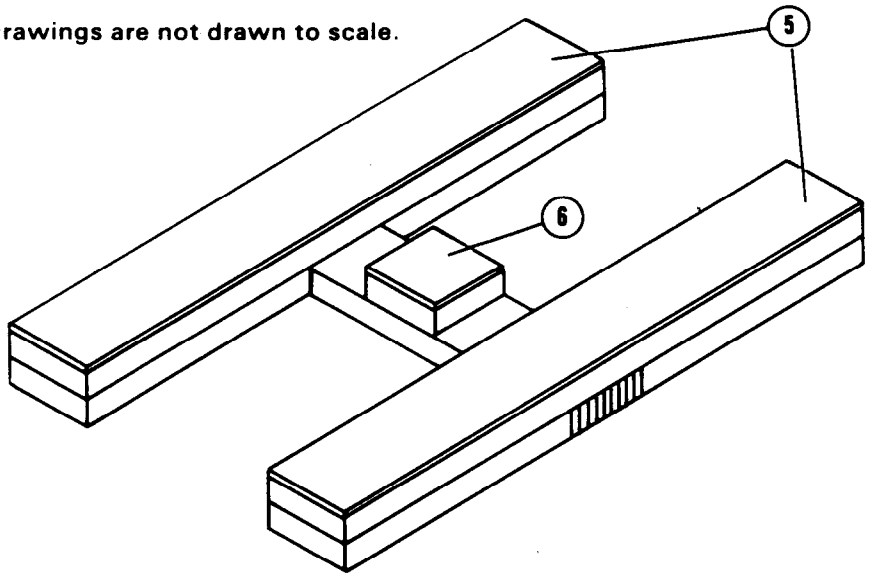

(5) Place a 3/4- by 12- by 54-inch piece of plywood flush over each side of the stack.

(6) Place a 3/4- by 10- by 10-inch piece of plywood flush over the honeycomb placed in step 4.

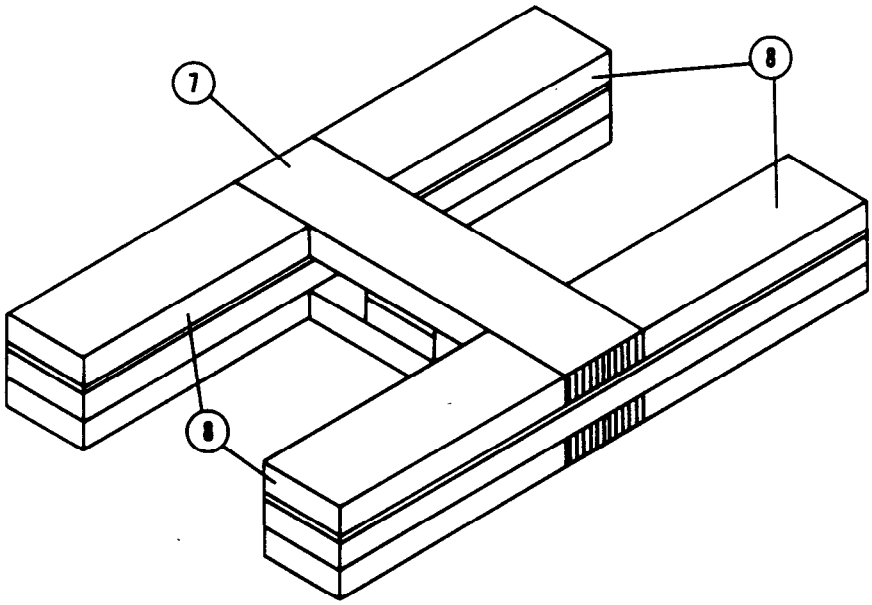

(7) Place a 42- by 10-inch piece of honeycomb flush over the bridge.

(8) Place a 12- by 22-inch piece of honeycomb over each leg perpendicular to the bridge.

Figure 5-4. Honeycomb stack 2 prepared (continued)

NOTE: These drawings are not drawn to scale.

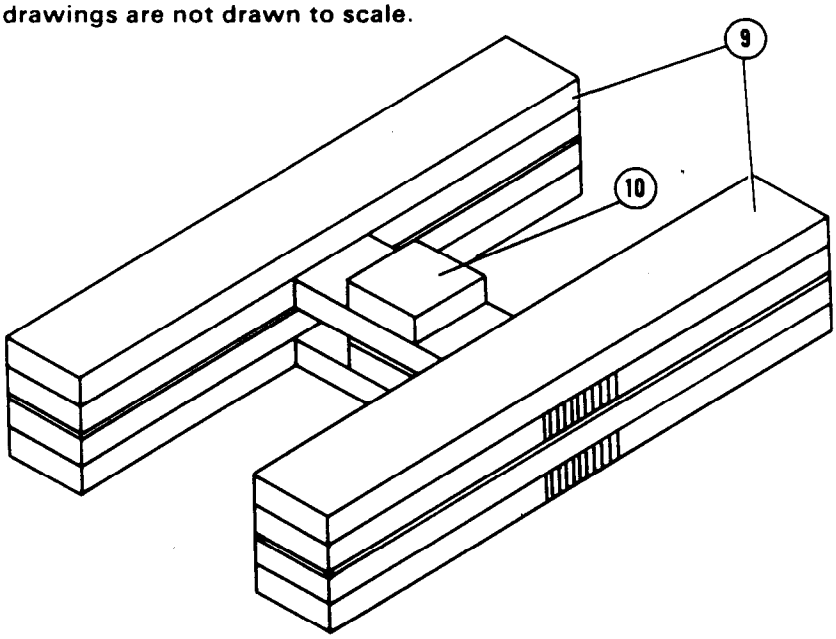

(9) Place a 12- by 54-inch piece of honeycomb flush over each side of the stack.

(10) Center a 10- by 10-inch piece of honeycomb over the bridge.

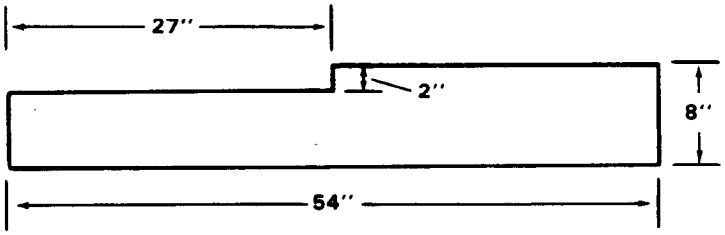

(11) Make cutouts as shown in six 8- by 54-inch pieces of honeycomb.

(12) Make the same cutouts in two 3/4- by 8- by 54-inch pieces of plywood.

Figure 5-4. Honeycomb stack 2 prepared (continued)

NOTE: These drawings are not drawn to scale.

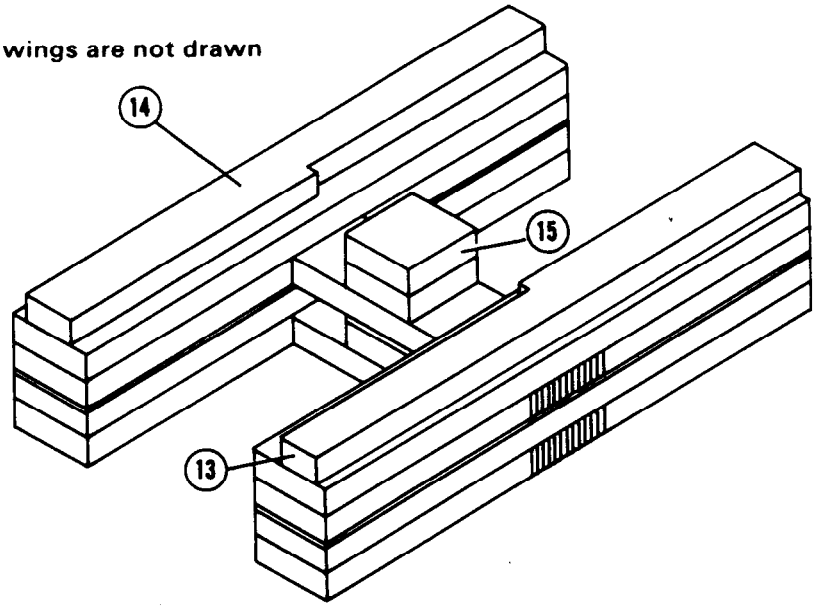

(13) Center one piece of honeycomb cut in step 11 over the right side of the stack so that the cutout is to the rear as shown.

(14) Center one piece of honeycomb cut in step 11 over the left side of the stack so that the cutout is to the front as shown.

(15) Center a 10- by 10-inch piece of honeycomb over the bridge.

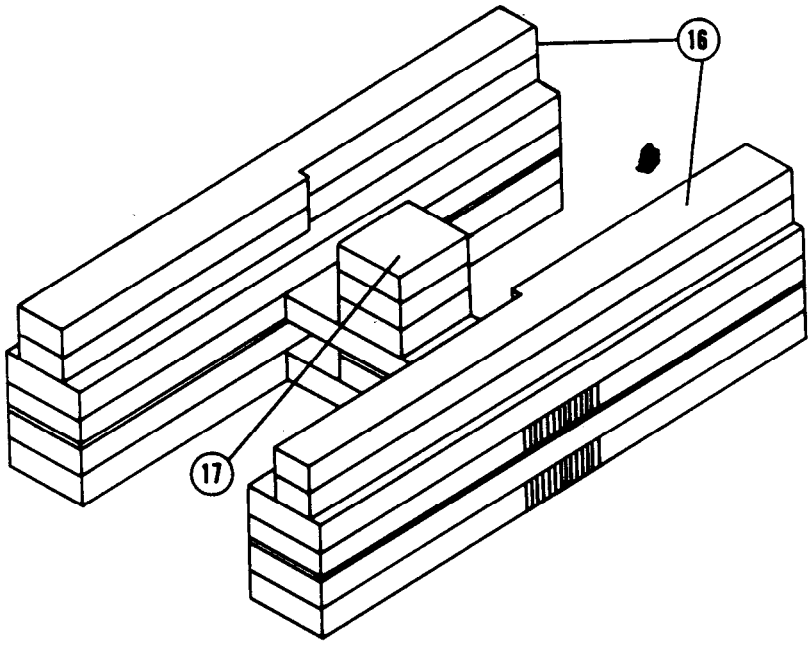

(16) Place a piece of the honeycomb cut in step 11 flush over each side of the stack so that the cutouts are aligned.

(17) Place a 10- by 10-inch piece of honeycomb flush over the bridge.

Figure 5-4. Honeycomb stack 2 prepared (continued)

NOTE: These drawings are not drawn to scale.

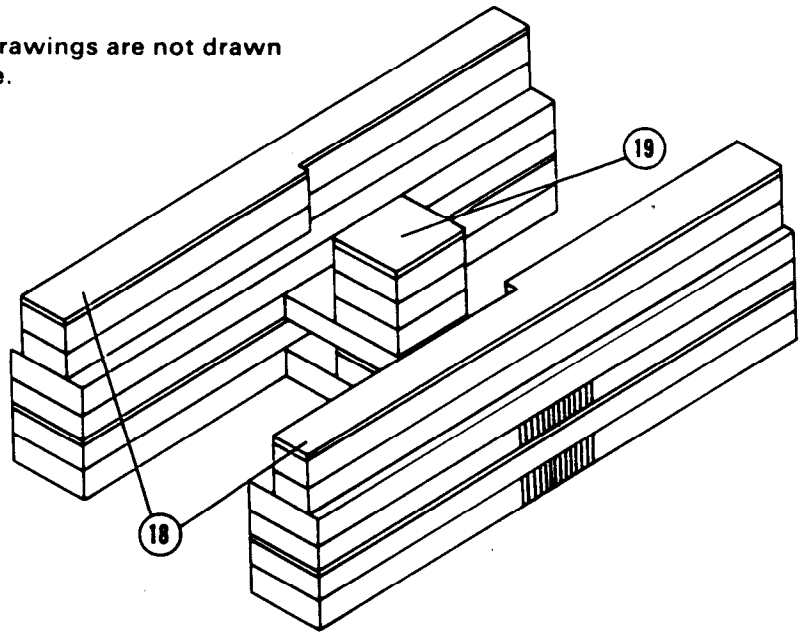

(18) Place a piece of the plywood cut in step 12 flush over each side of the stack so that the cutouts are aligned.

(19) Place a 3/4- by 10- by 10-inch piece of plywood flush over the bridge.

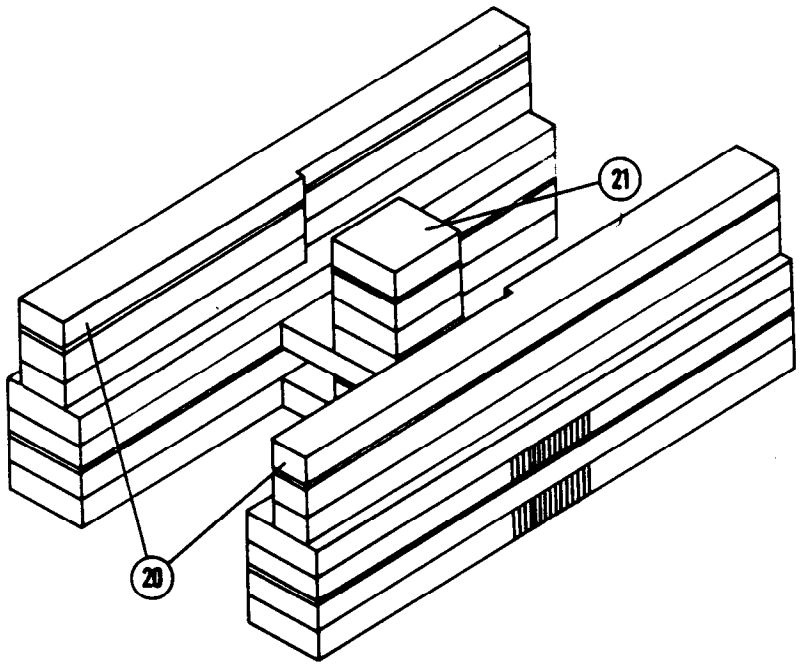

(20) Place a piece of the honeycomb cut in step 11 flush over each side of the stack so that the cutouts are aligned.

(21) Place a 10- by 10-inch piece of honeycomb flush over the bridge.

Figure 5-4. Honeycomb stack 2 prepared (continued)

NOTE: This drawing is not drawn to scale.

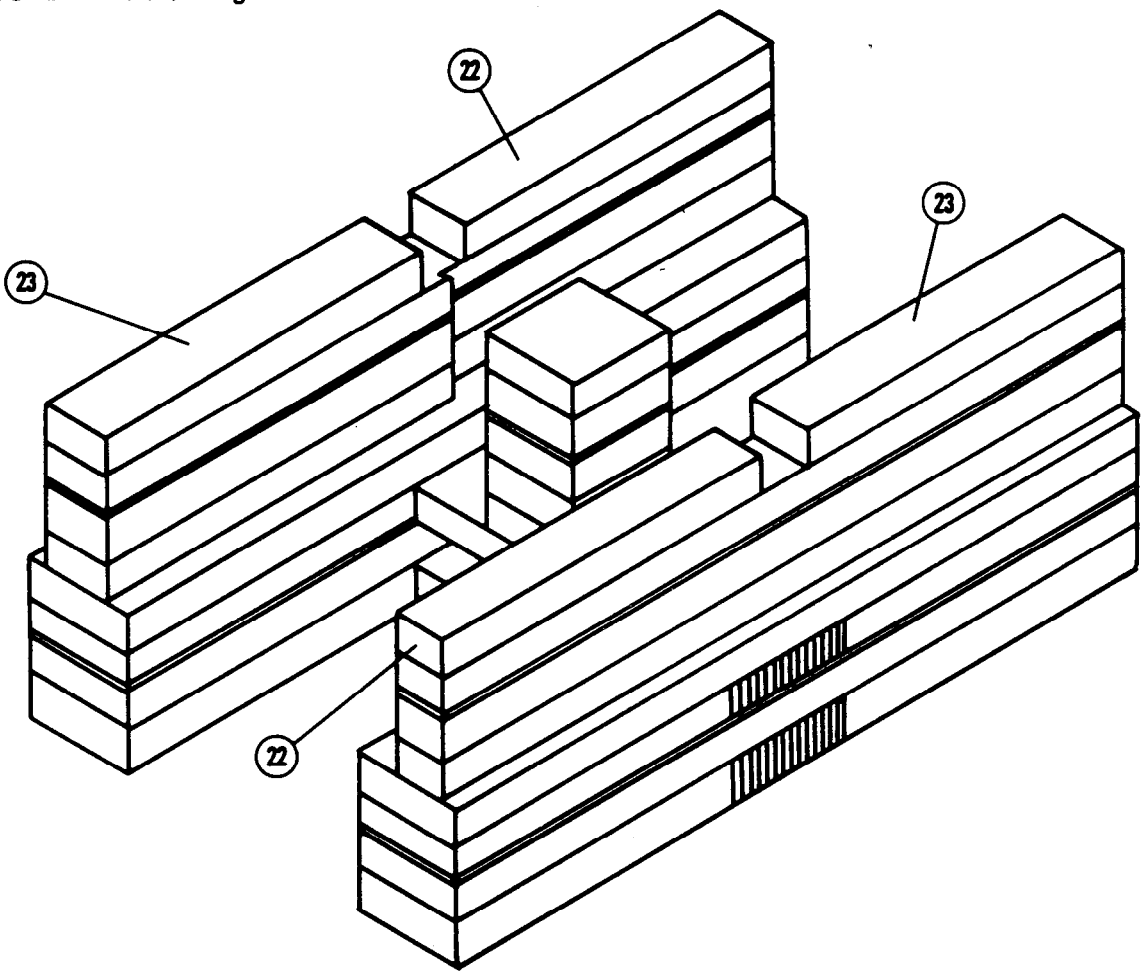

(22) Place a 6- by 24-inch piece of honeycomb flush with the left front edge of the stack. Place a 6- by 24-inch piece of honeycomb flush with the right rear edge of the stack.

(23) Place an 8- by 24-inch piece of honeycomb flush with the right front edge of the stack. Place an 8- by 24-inch piece of honeycomb flush with the left rear edge of the stack.

Figure 5-4. Honeycomb stack 2 prepared (continued)

NOTE: This drawing is not drawn to scale.

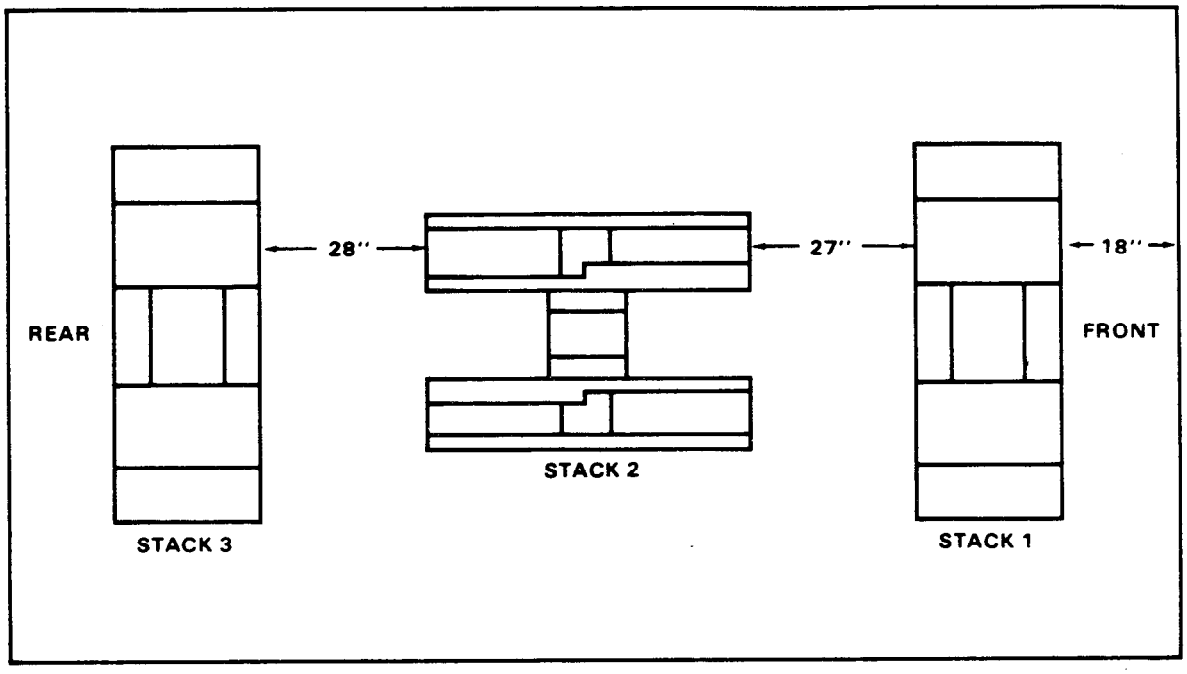

Stack Number	Position of Stack on Platform
	Place stack:
1	18 inches from the front edge of the platform and centered.
2	27 inches behind stack 1 and centered.
3	28 inches behind stack 2 and centered.

Figure 5-5. Honeycomb stacks positioned on platform

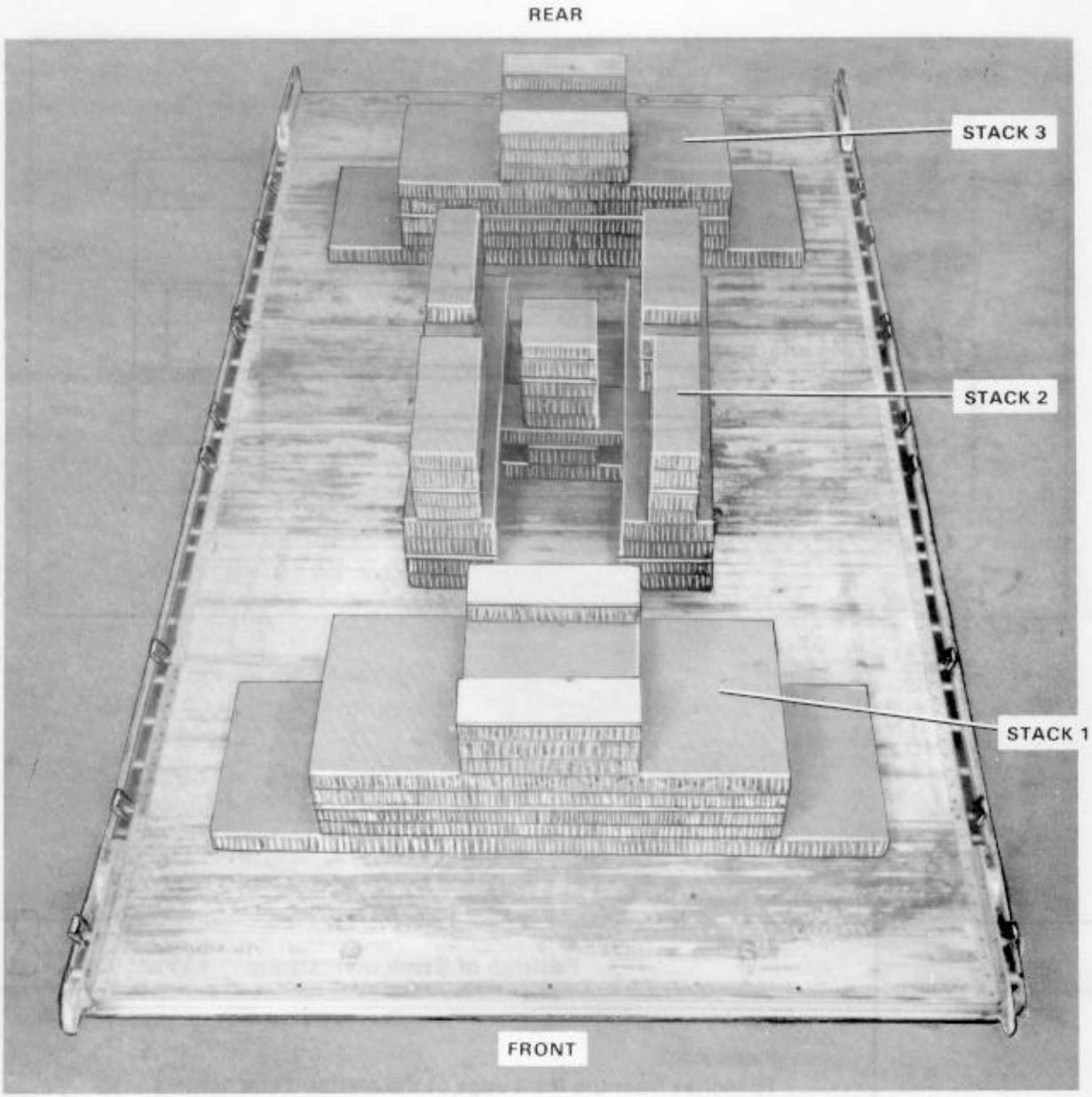

Figure 5-6. Front view of honeycomb stacks positioned on platform

5-4. Preparing Truck

Prepare the truck as described below and as shown in Figures 5-7 through 5-16.

a. Make sure the fuel tank is not more than 1/2 full.

b. Remove the top cover and front doors.

c. Tape all lights, reflectors, and gages.

d. Tape the windshield.

NOTE: This truck has a bumper grill protector that may not be on all Air Force M998s.

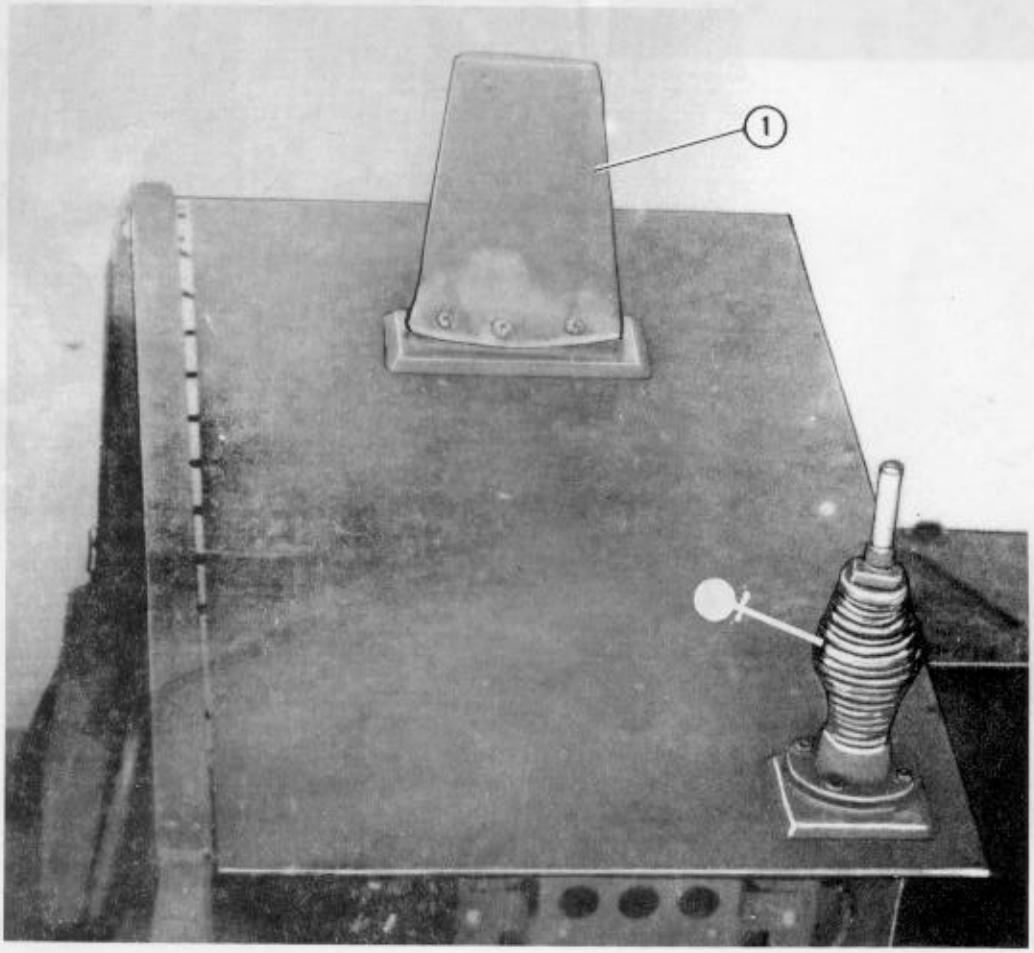

(1) Remove the FM and dual VHF/UHF antennas or shark fins. Place the bolts back in their holes, and secure them with tape (not shown).

(2) Cover the cable ends with their cap or a piece of tape (not shown).

(3) Remove the HF antenna mount. Place the bolts back in their holes, and secure them with tape (not shown).

Figure 5-7. Antennas removed and secured

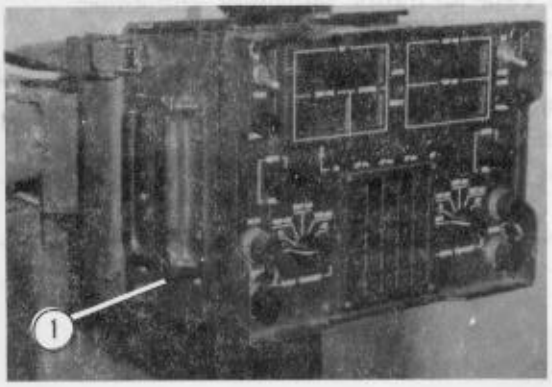

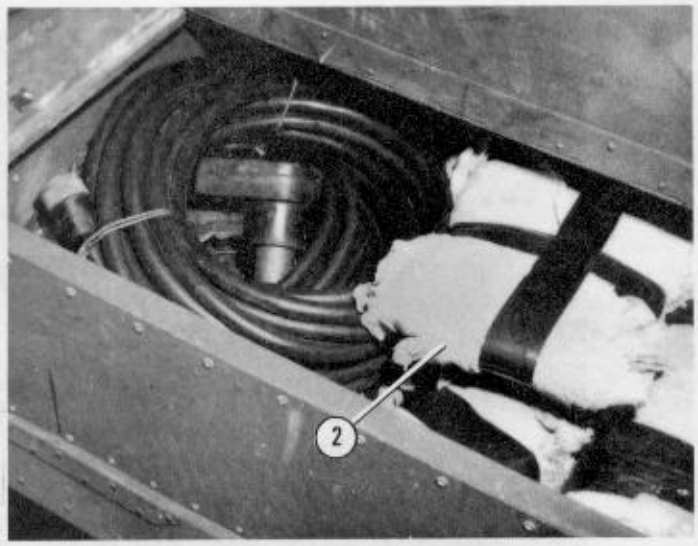

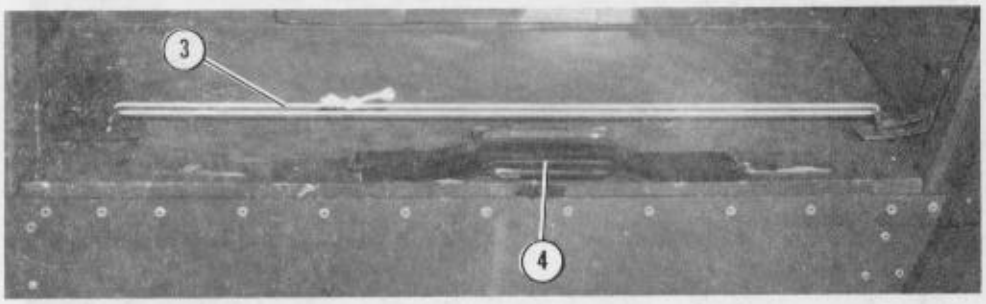

(1) Remove the first RSC from the mounting bracket on the front dash and the second RSC (not shown) from the tool storage box.

(2) Wrap both RSCs and antennas in cellulose wadding. Coil all cables, and secure them with type III nylon cord or tape. Place the RSCs, antennas, and cables in the tool storage box. Also place the antenna mounts, roll of field wire, slave cable, generator power cable, and any classified equipment that may be needed with the radios in the tool storage box. Fill empty areas with scrap pieces of honeycomb.

(3) Close the tool storage box door, and safety the latches together with type III nylon cord.

(4) Tape the tool storage box handle down.

Figure 5-8. RSC secured

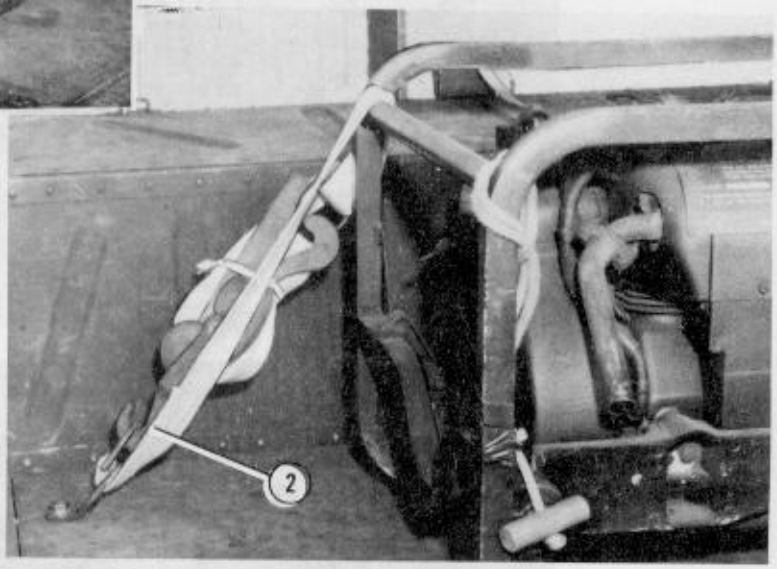

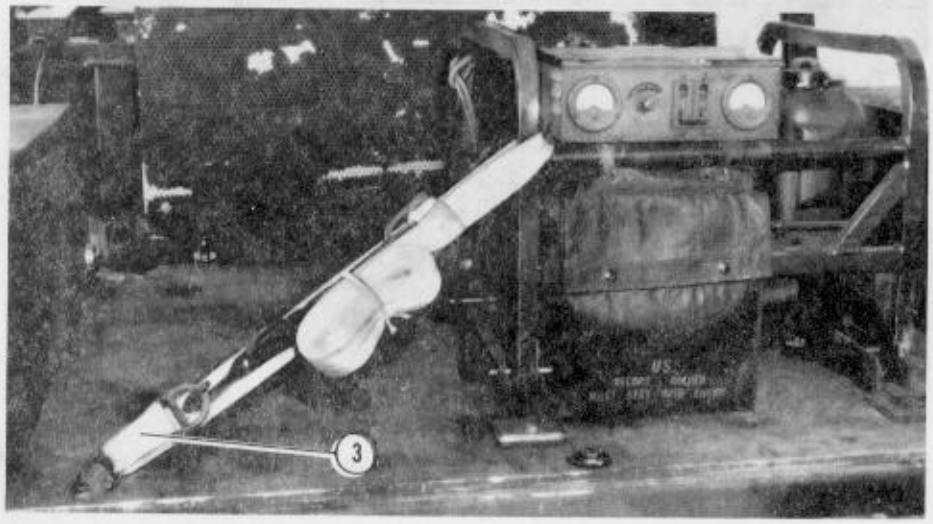

1. Place the generator in its rack, and install the safety pins.
2. Pass a 15-foot tiedown strap through the left rear D-ring of the cargo bed to the left rear side of the generator frame. Secure the ends with a D-ring and a load binder.
3. Pass a 15-foot tiedown strap through the right front D-ring of the cargo bed to the right front side of the generator frame. Secure the ends with a D-ring and a load binder.

Figure 5-9. Generator secured

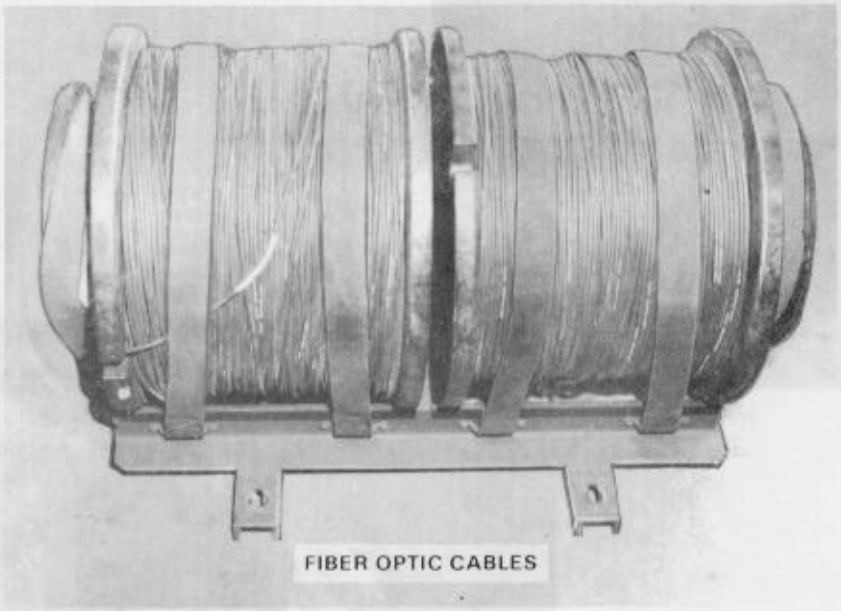

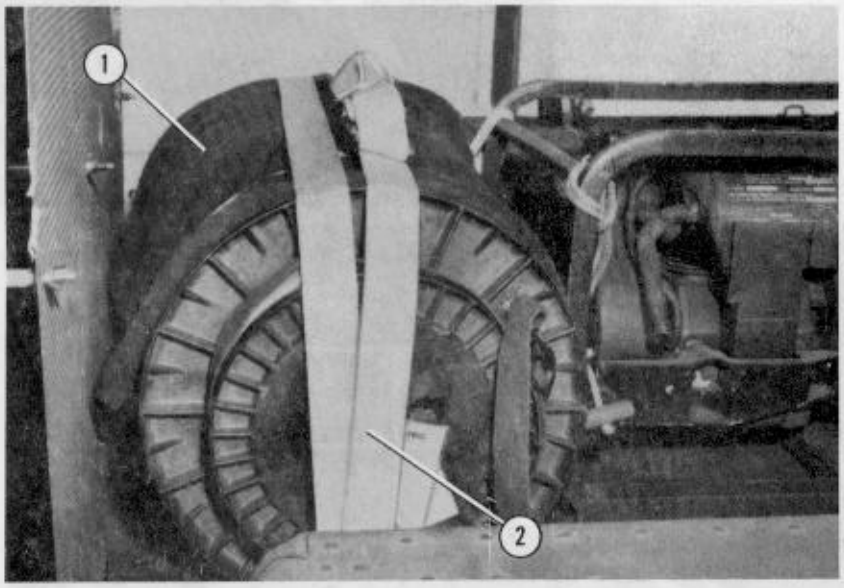

(1) Wrap the fiber optic cables with a 28- by 36-inch piece of felt. Secure the felt with type III nylon cord.

(2) Position the optic cable reels in front of the generator. Run a 15-foot tiedown strap through the left front D-ring of the cargo bed, over the top of the optic cable reels, through the right front D-ring, and back over the top of the optic cable reels. Secure the ends together with a D-ring and a load binder.

Figure 5-10. Optic cable reels secured

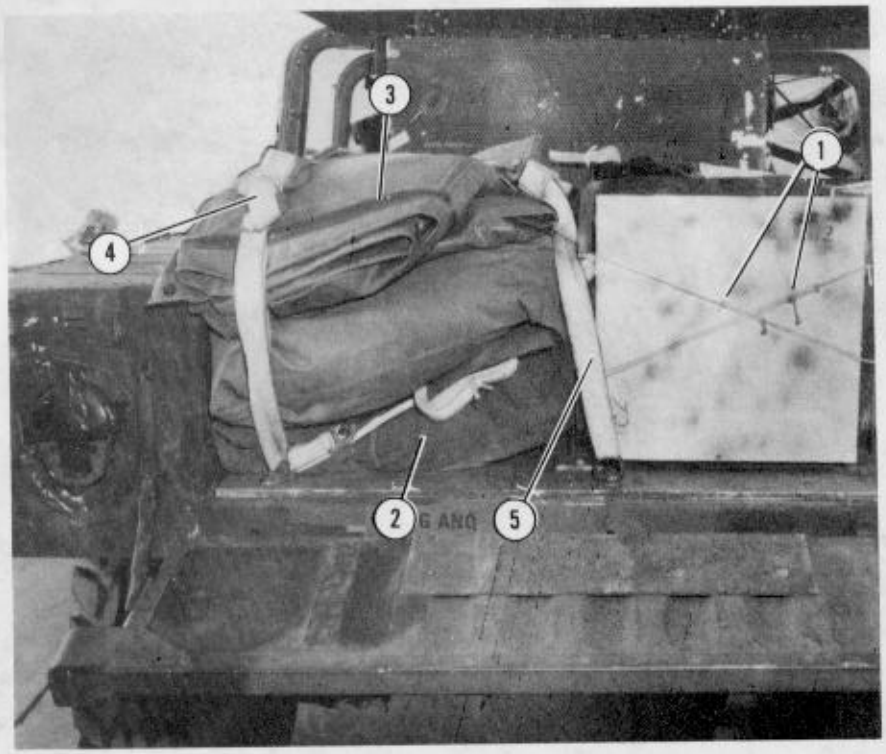

1. Secure the generator grounding plate to the rear of the generator frame with type III nylon cord.
2. Roll the camouflage net, shovel, and ax inside the tent. Place the tent on the left side of the generator.
3. Set the canvas top on top of the equipment.
4. Run a 15-foot tiedown strap through the left front D-ring of the cargo bed, over the top of the equipment, through the left rear D-ring, and back over the top of the equipment. Secure the ends with a D-ring and a load binder.
5. Run a second tiedown strap through the left front D-ring of the cargo bed, over the top of the equipment, through the center rear D-ring, and back over the top of the equipment. Secure the ends with a D-ring and a load binder.

Figure 5-11. Accompanying load secured

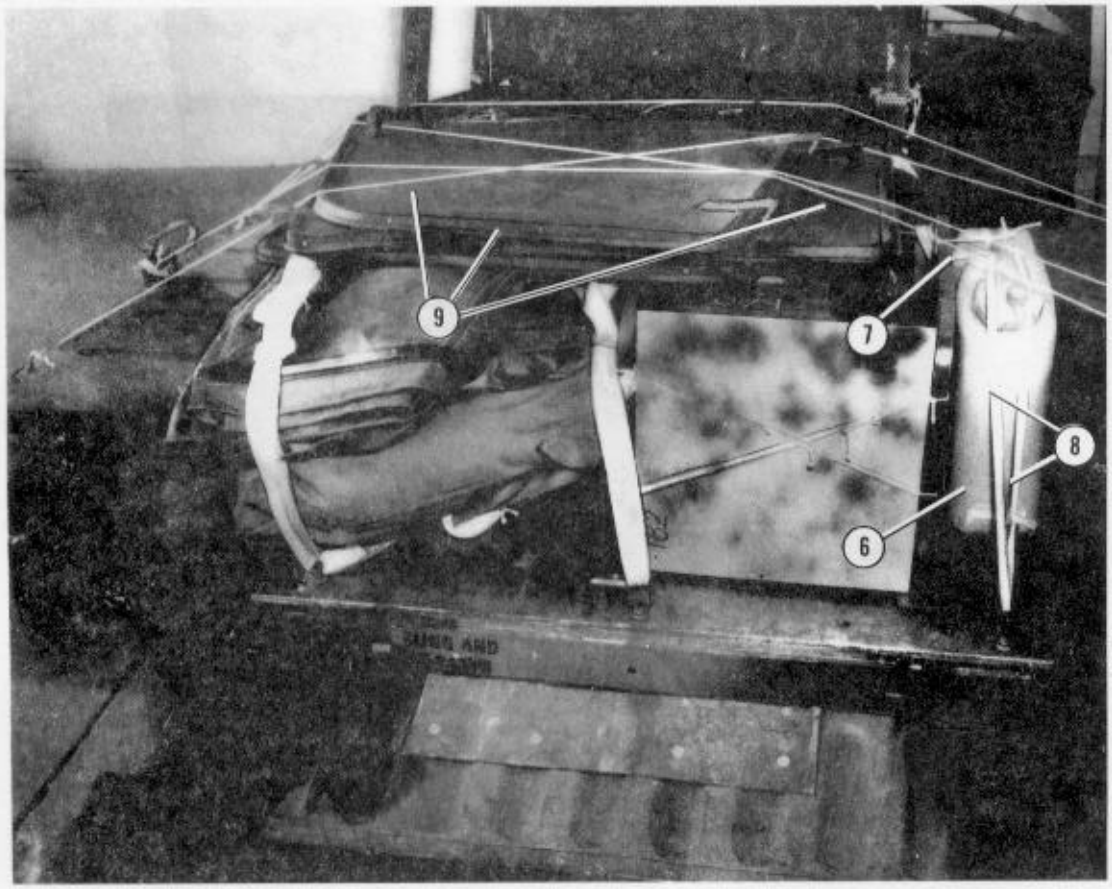

(6) Place the water can on the right side of the generator.

(7) Pass a length of 1 2-inch tubular nylon webbing through the carrying handle of the water can and around the top right frame of the generator. Tie the ends of the webbing together.

(8) Pass a length of 1 2-inch tubular nylon webbing through the right front D-ring of the cargo bed. Take both ends of the webbing and interlace them through the carrying handle of the water can. Take one end and pass it through the right rear D-ring. Tie the ends of the webbing together.

(9) Place the doors on top of the generator and canvas top. Secure the doors to the vehicle with type III nylon cord.

Figure 5-11. Accompanying load secured (continued)

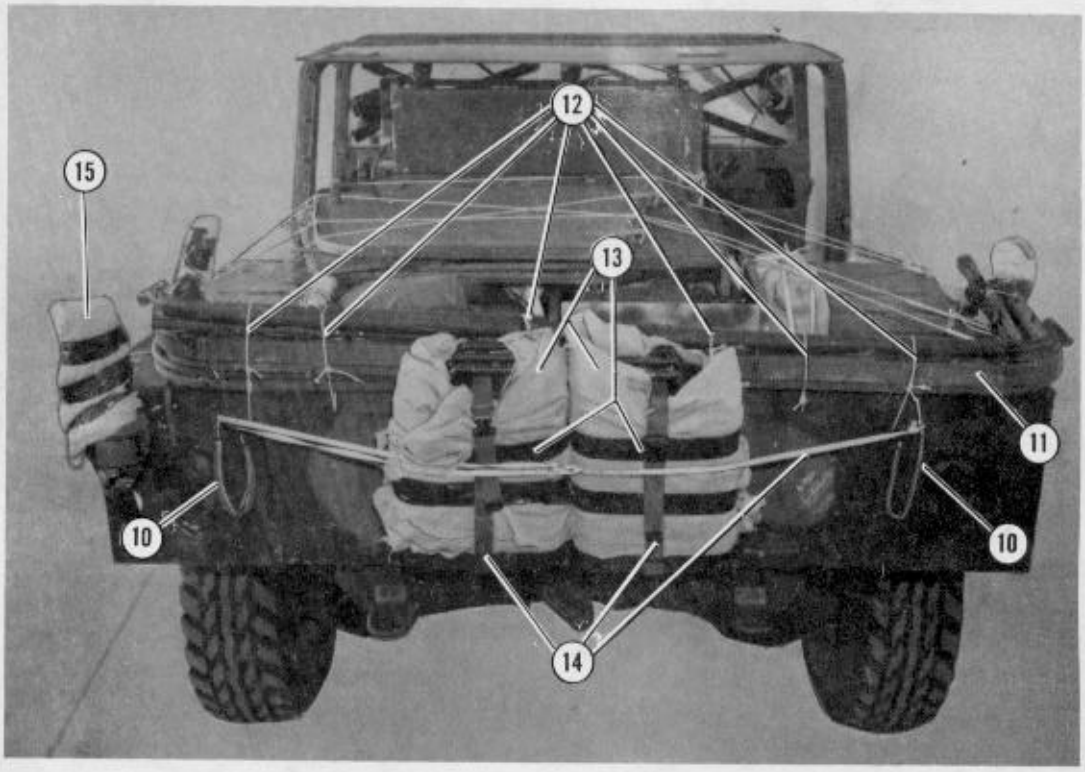

(10) Close and secure the tailgate.

(11) Lay the bows on top of the rear fenders and the tailgate.

(12) Secure the bows with type III nylon cord.

(13) Wrap the fuel cans with cellulose wadding. Tape the wadding in place.

(14) Place the fuel cans in their racks, and secure them with the straps provided and a length of 1/2-inch tubular nylon webbing.

(15) Wrap the antenna mount with cellulose wadding. Tape the wadding in place.

Figure 5-11. Accompanying load secured (continued)

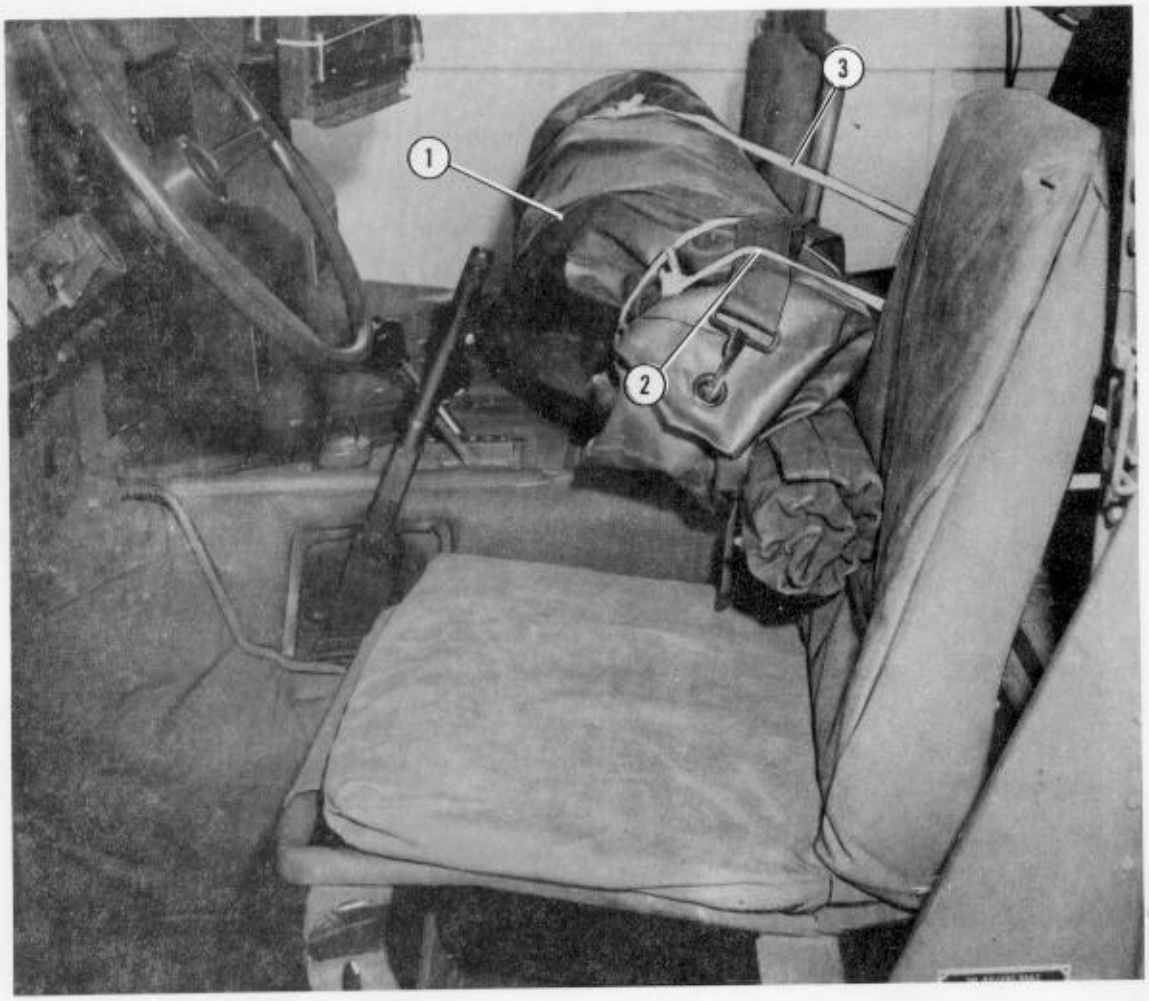

(1) Place the antennas and netting poles in their covers. Set them across the front seats.

(2) Run a length of 1/2-inch tubular nylon webbing through the left front D-ring on the cargo bed floor and around the net poles and antennas. Tie the ends of the webbing together.

(3) Repeat the procedures in step 2 above using the right front D-ring.

Figure 5-12. Antennas and netting pole secured

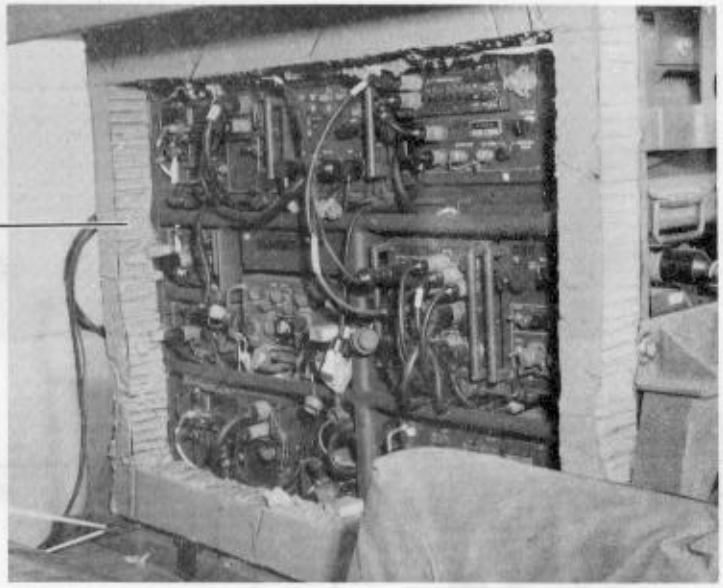

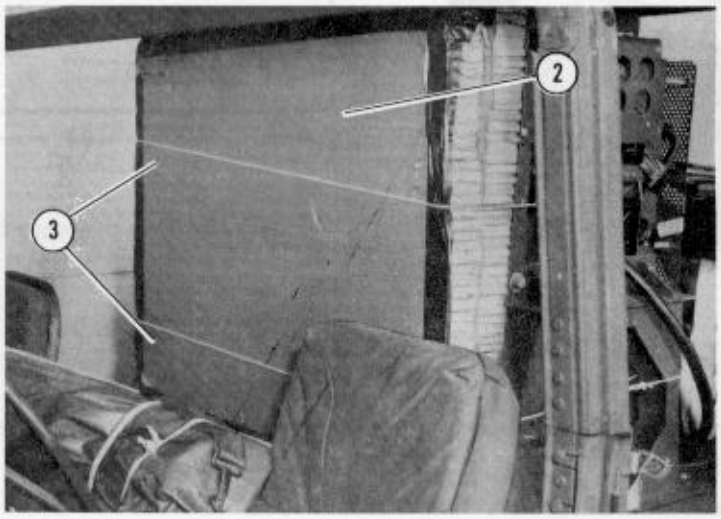

1. Make a 26- by 35-inch cutout in the center of a 33- by 40-inch piece of honeycomb. Place the honeycomb in front of the GRC/206 radio pallet.
2. Place a 33- by 40-inch piece of honeycomb against the first piece of honeycomb. Tape the edges of the second piece of honeycomb.
3. Secure the honeycomb pieces to the GRC/206 radio pallet with type III nylon cord.

Figure 5-13. Radio pallet secured

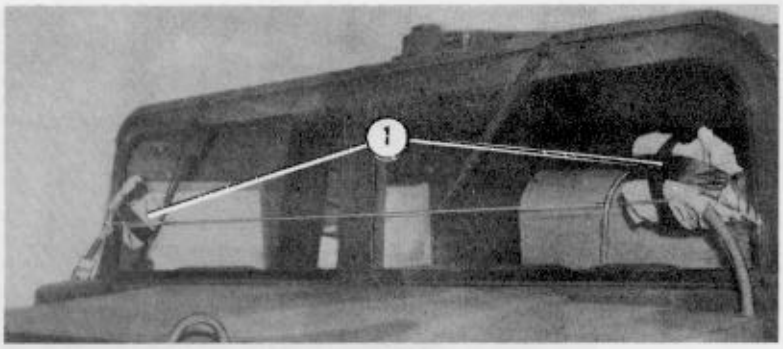

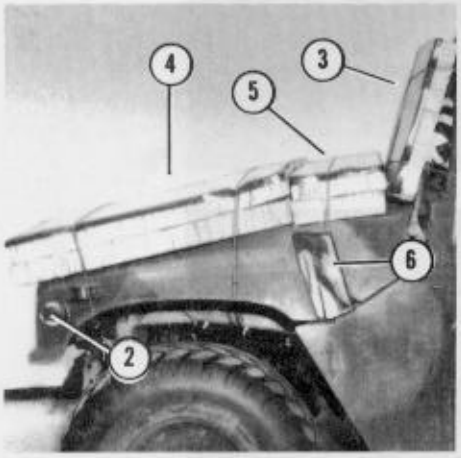

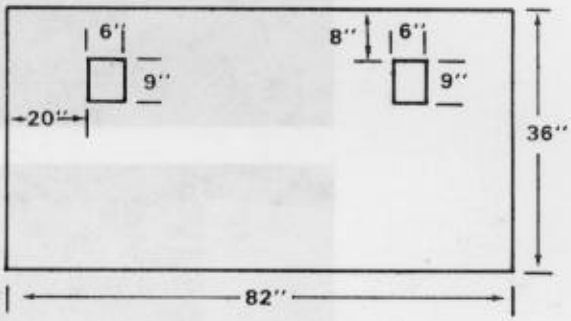

NOTE: This drawing is not drawn to scale.

(1) Pad the mirrors with cellulose wadding taped in place. Fold the mirrors inward, and tie them together with type III nylon cord.

(2) Tape all lights and reflectors.

(3) Place a 21- by 83-inch piece of honeycomb over the outside of the windshield and mirrors. Tie the honeycomb to the windshield with two lengths of type III nylon cord.

(4) Place two 36- by 82-inch pieces of honeycomb on the hood, with cutouts as shown. Tape the 36-inch sides of the top piece. Tie the honeycomb in place with two lengths of type III nylon cord. Tie one length to the coil springs and the other to the upper suspension arms.

(5) Place two 12- by 82-inch pieces of honeycomb between the windshield and the pieces of honeycomb positioned in step 4 above. Tape the top outside edges. Secure the honeycomb to the hood latch brackets with type III nylon cord.

(6) Tape the hood latches.

Figure 5-14. Front of truck prepared

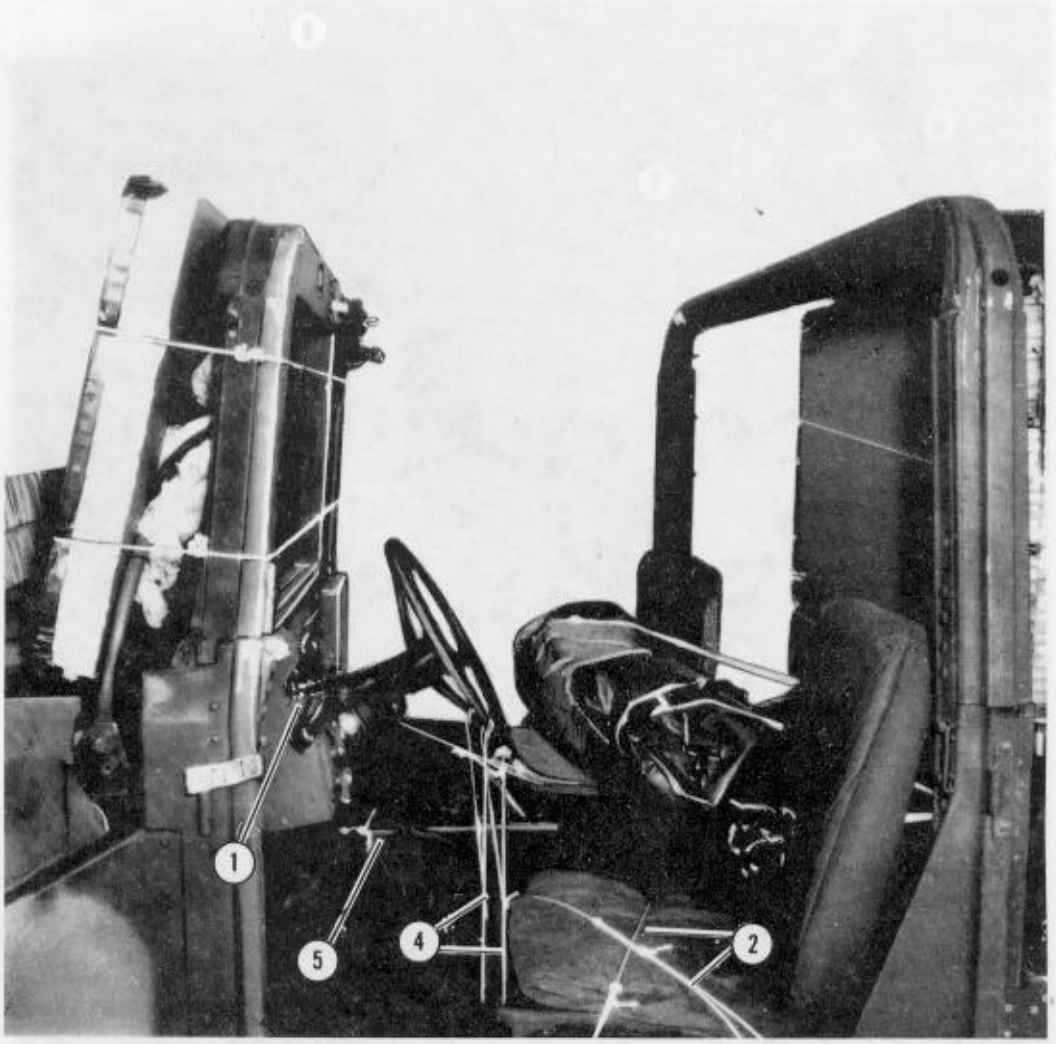

(1) Tape the engine start and stop switch in the stop position.

(2) Secure seats and seat cushions to the seat frame with type III nylon cord.

(3) Secure the fire extinguisher in place with type III nylon cord, if required (not shown).

(4) Secure the steering wheel to the seat frame with type III nylon cord.

(5) Tie the emergency brake handle in the off position with type III nylon cord.

Figure 5-15. Cab of truck prepared

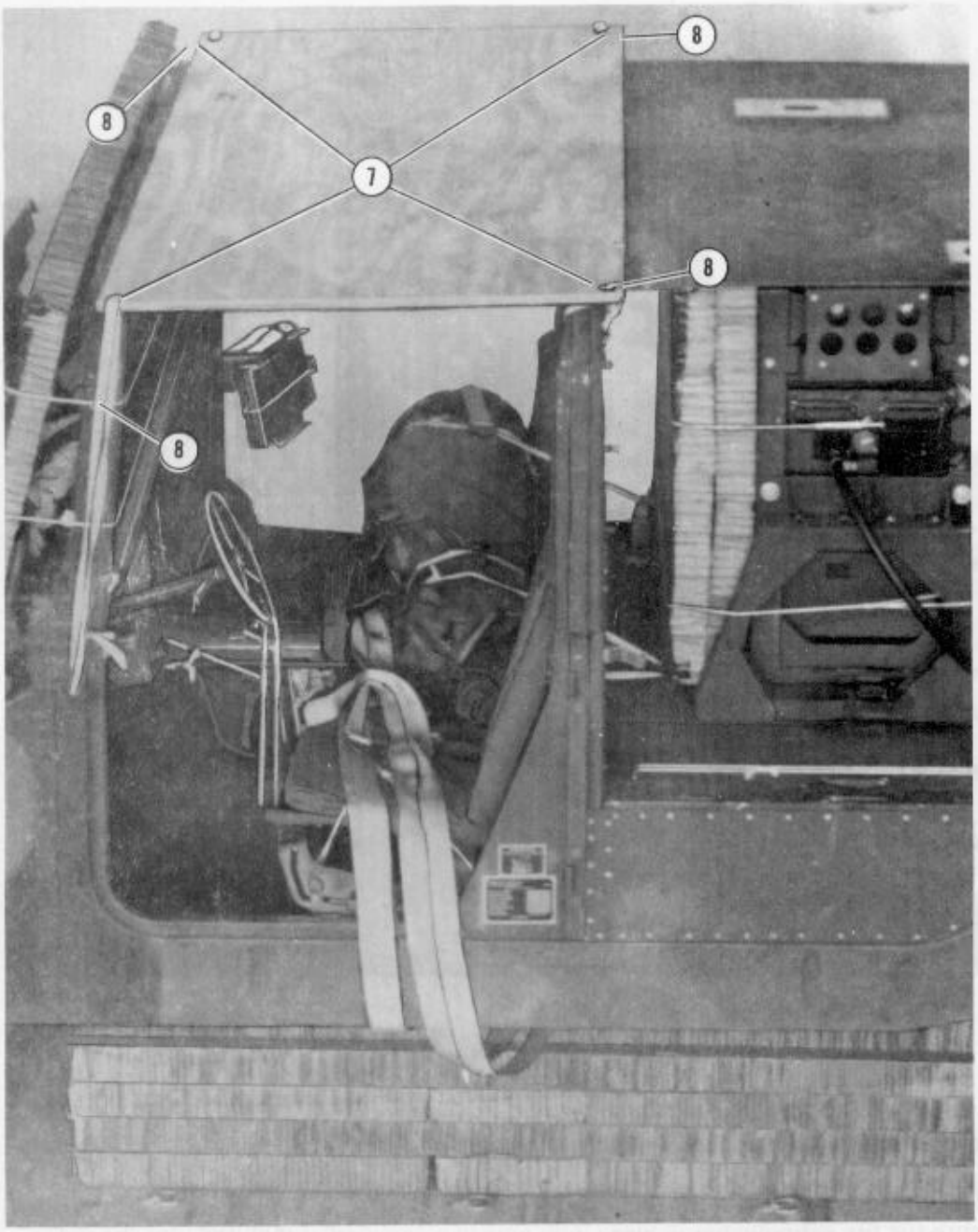

(7) Make a 1/2-inch hole in each corner (2 inches from each edge) of a 3/4- by 36- by 82-inch piece of plywood. Place the plywood over the top of the driver compartment.

(8) Pass a length of 1/2-inch tubular nylon webbing through each of the holes of the plywood. Secure each corner of the plywood to the top bow frame.

Figure 5-15. Cab of truck prepared (continued)

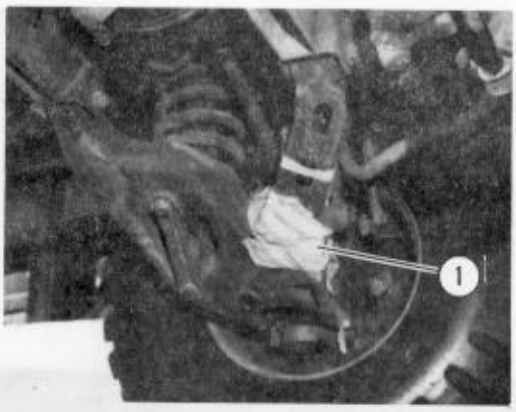

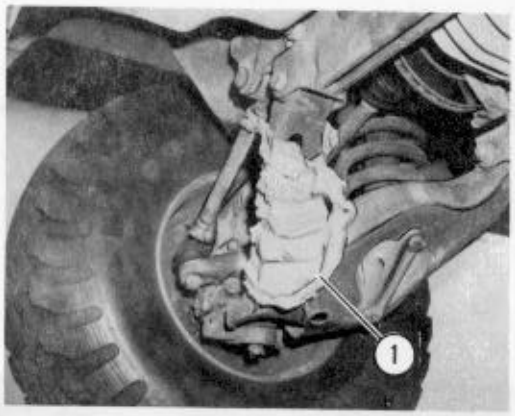

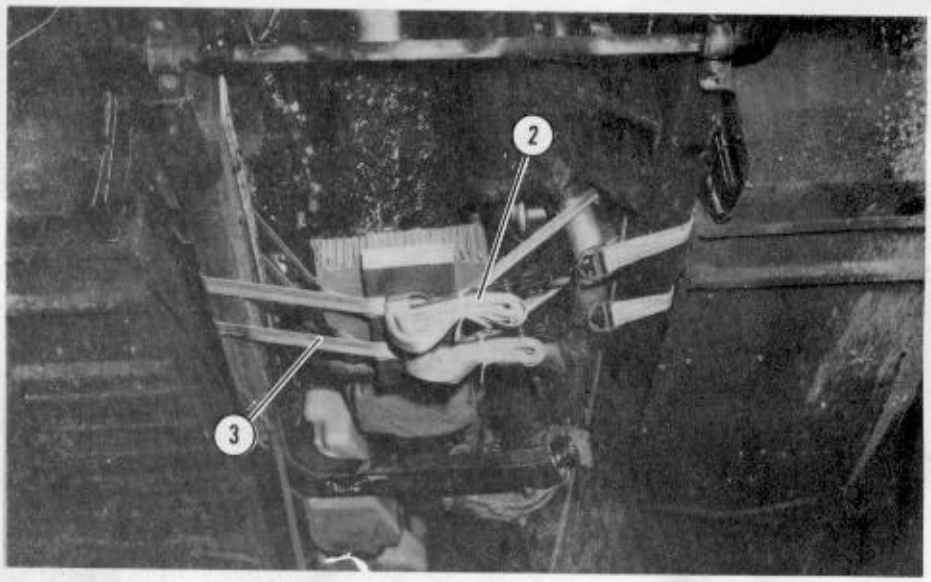

(1) Pad the lower control arms on the front and rear of the truck with cellulose wadding taped in place.

(2) Pass a 15-foot tiedown strap over the right frame rail, under the oil pan, and over the left frame rail. Make sure the wires running along the frame rail are to the outside of the strap. Place a 12- by 12-inch piece of honeycomb and a 2- by 6- by 16-inch piece of lumber between the strap and oil pan. Fasten the strap with a D-ring and a load binder.

(3) Install another tiedown strap just to the rear of the strap installed in step 2 above. Make sure the strap goes over the exhaust pipe, then under it.

Figure 5-16. Underside of truck prepared

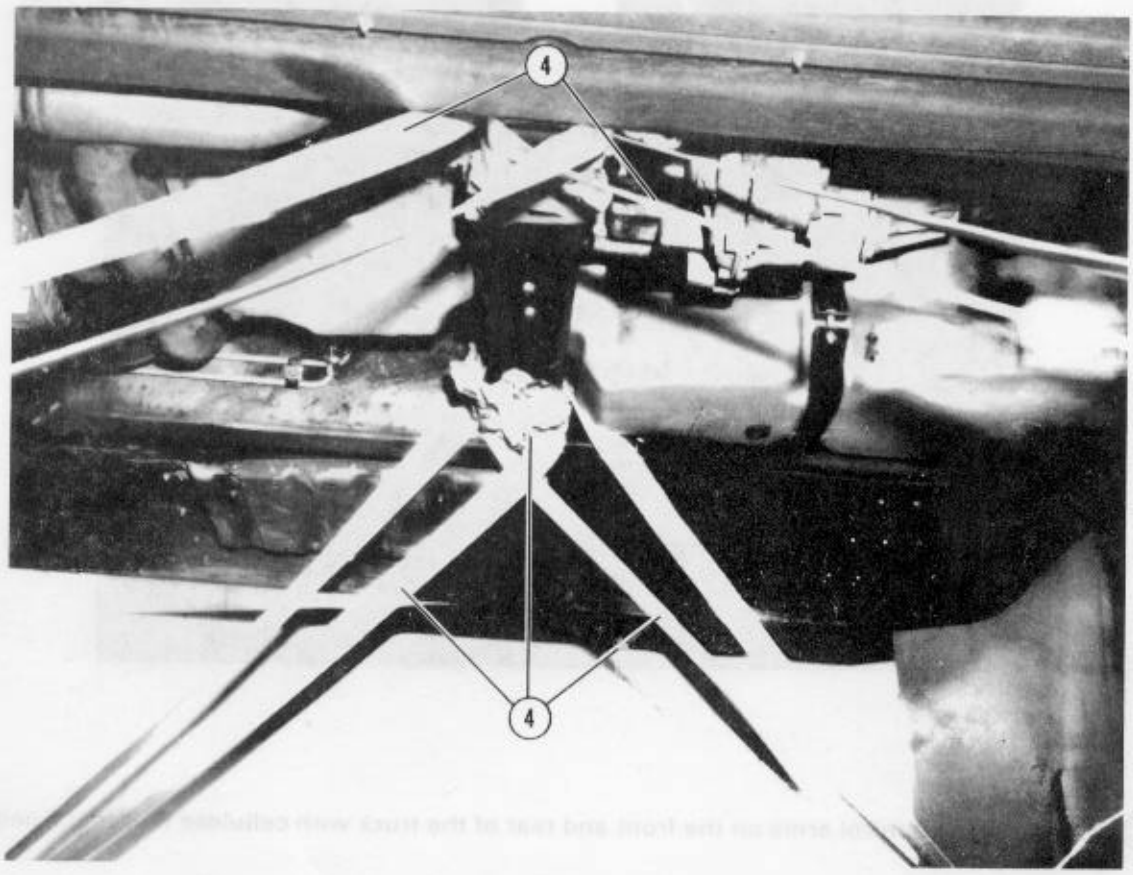

(4) Pad each end of the cross member with cellulose wadding. Tape the wadding. Wrap two 15-foot tiedown straps around the cross member on each end. Use these four straps to lash the truck to the platform. Place the ends of the straps inside the truck until needed.

Figure 5-16. Underside of truck prepared (continued)

5-5. Installing Lifting Slings

Install lifting slings as shown in Figure 5-17.

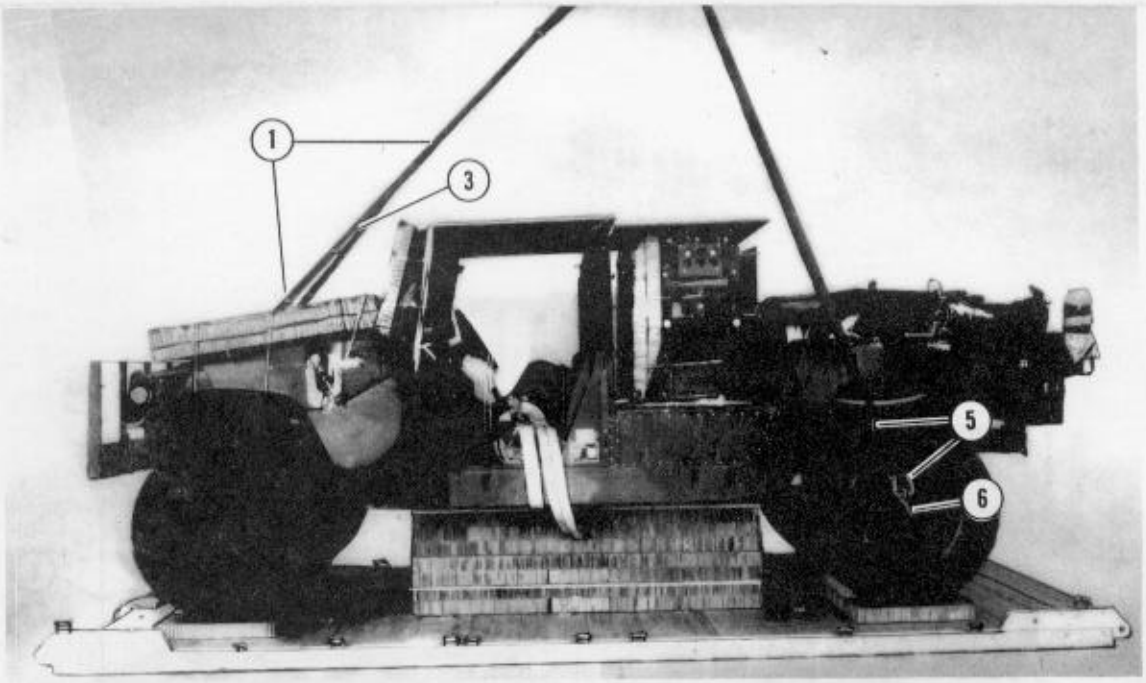

1. Pass a 3-foot (2-loop), type XXVI nylon webbing sling through one end of a 9-foot (2-loop), type XXVI nylon webbing sling.
2. Pass a medium clevis through both ends of the 3-foot sling, forming a donut. Bolt the clevis to the right front lifting point on the hood (not shown).
3. Repeat steps 1 and 2 above for the left front lifting point.
4. Remove the front lifting shackles on the front bumper, and install them on the rear wheels on the truck (not shown).

   NOTE: Make sure the shackles on the rear wheels are in a horizontal position when the truck is being positioned on the platform.
5. Install a medium clevis on one end of a 12-foot (2-loop), type XXVI nylon webbing sling.
6. Pass another medium clevis through the lifting shackle on the right rear wheel of the truck. Attach the clevis on the end of the 12-foot sling to the medium clevis on the right wheel lifting shackle.
7. Repeat steps 5 and 6 above for the left rear wheel shackle.

Figure 5-17. Lifting slings installed

5-6. Positioning Truck

Position the truck on the platform as shown in Figure 5-18.

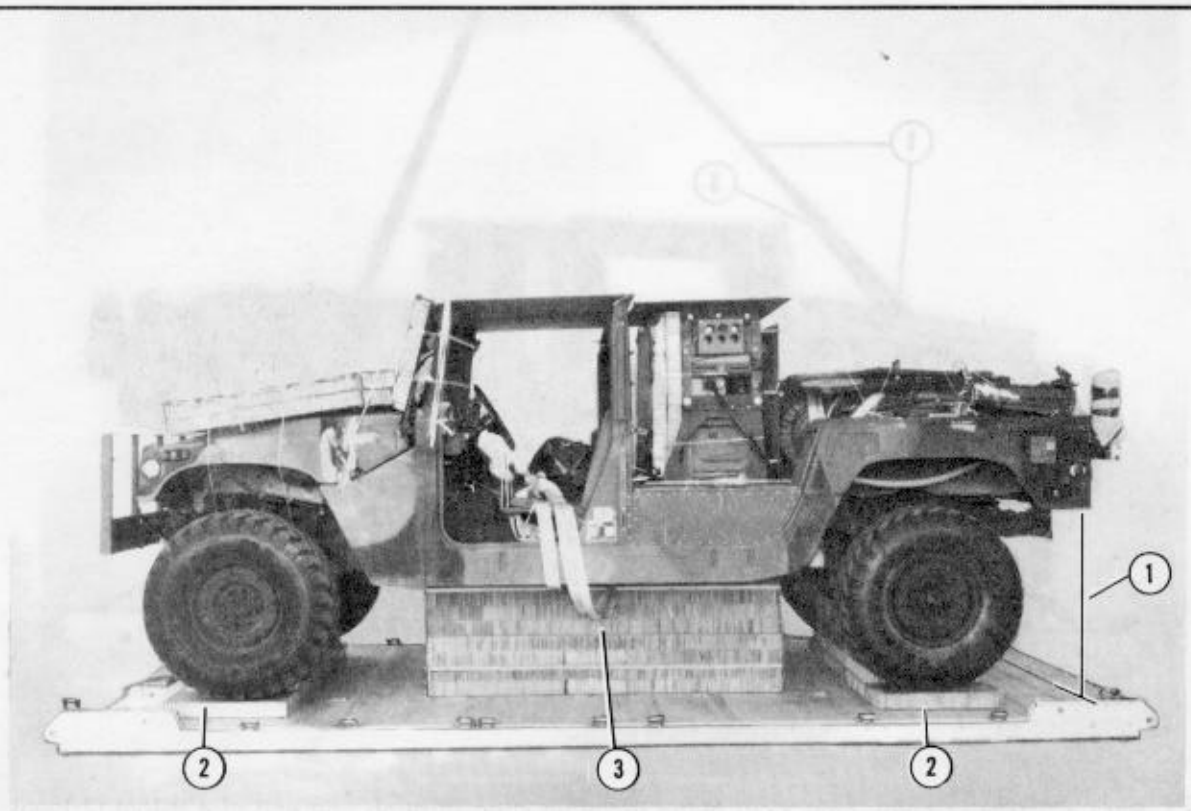

1. Center the truck on the platform with the rear of the truck 4 inches from the front edge.
2. Make sure that the suspension cross members rest squarely on stacks 1 and 3.
3. Make sure that the frame rails rest squarely on stack 2.
4. Remove the lifting slings, and place the shackles back on the front bumper (not shown).
5. Put the transmission and 4-wheel drive lever in the neutral position (not shown).

Figure 5-18. Truck positioned

5-7. Lashing Truck

Lash the truck to the platform using eighteen 15-foot tiedown assemblies. Install the lashings according to FM 10-500/TO 13C7-1-5 and as shown in Figures 5-19 and 5-20.

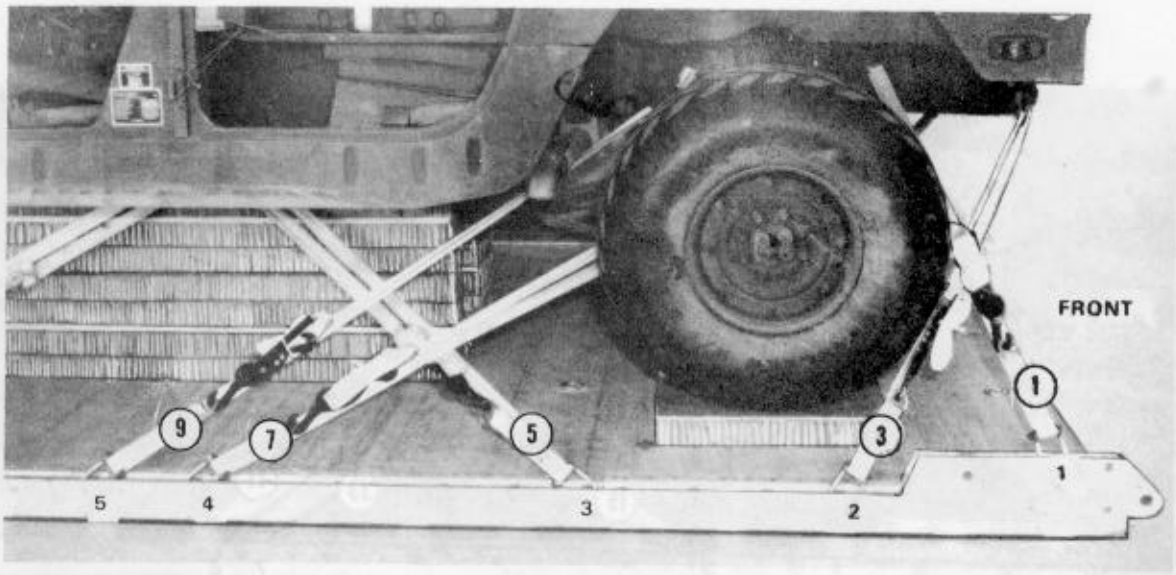

Lashing Number	Tiedown Clevis Number	Instructions
		Pass lashing:
1	1	Through tiedown bracket behind left rear coil spring.
2	1A	Through tiedown bracket behind right rear coil spring.
3	2	Through left rear lifting shackle.
4	2A	Through right rear lifting shackle.
*5	3	Around left end of the cross member.
*6	3A	Around right end of the cross member.
7	4	Around left rear lower control arm.
8	4A	Around right rear lower control arm.
9	5	Through tiedown bracket in front of left rear coil spring.
10	5A	Through tiedown bracket in front of right rear coil spring.

*These are lashings pre-positioned in Figure 5-16, step 4.

Figure 5-19. Lashings 1 through 10 installed

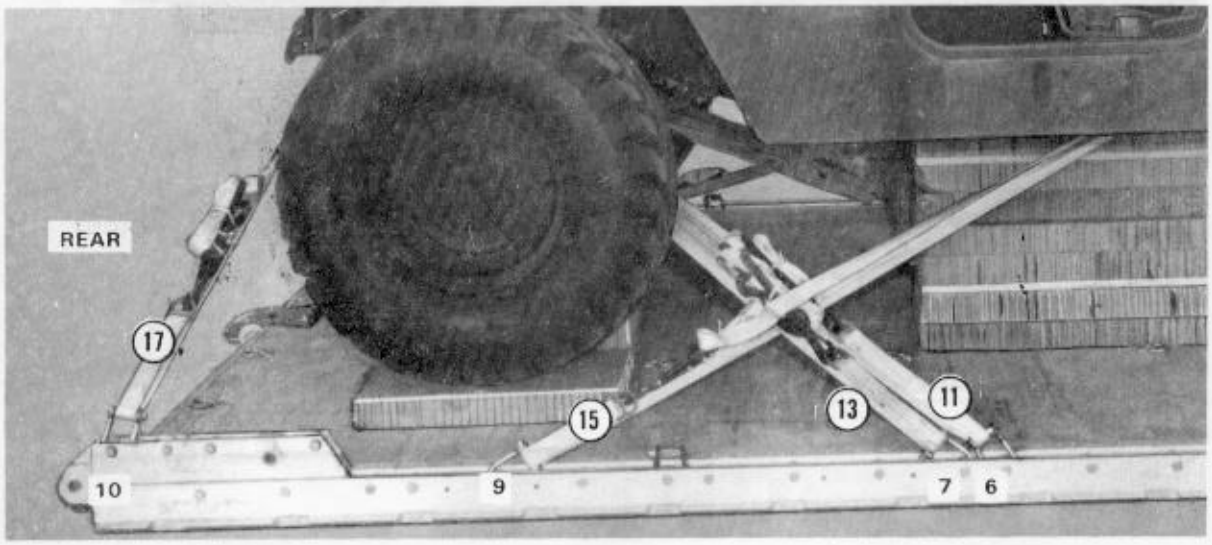

Lashing Number	Tiedown Clevis Number	Instructions
		Pass lashing:
11	6	Through tiedown bracket behind left front coil spring.
12	6A	Through tiedown bracket behind right front coil spring.
13	7	Around left lower control arm.
14	7A	Around right lower control arm.
*15	9	Around left end of the cross member.
*16	9A	Around right end of the cross member.
17	10	Through tiedown bracket on end of left frame rail.
18	10A	Through tiedown bracket on end of right frame rail.

*These are lashings pre-positioned in Figure 5-16, step 4.

Figure 5-20. Lashings 11 through 18 installed

5-8. Building Body Protection Boards

Build two body protection boards as shown in Figure 5-21.

NOTE: This drawing is not drawn to scale.

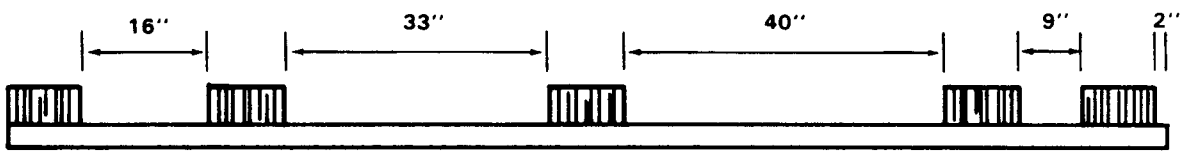

STEP:

1. Use one 2- by 6- by 150-inch piece of lumber and five 6- by 10-inch pieces of honeycomb.
2. Glue or tape the first piece of honeycomb 2 inches from either end of the board.
3. Glue or tape the second piece of honeycomb 9 inches behind the first piece of honeycomb.
4. Glue or tape the third piece of honeycomb 40 inches behind the second piece of honeycomb.
5. Glue or tape the fourth piece of honeycomb 33 inches behind the third piece of honeycomb.
6. Glue or tape the fifth piece of honeycomb 16 inches behind the fourth piece of honeycomb.
7. Use the procedures in steps 1 through 6 above to build the second body protection board.

Figure 5-21. Body protection boards built

5-9. Securing Body Protection Boards

Secure the body protection boards on the truck as shown in Figure 5-22.

1. Pass a 15-foot tiedown strap around the upper control arm and through its own D-ring on the right front and left front of the truck.
2. Pass a 15-foot tiedown strap around the upper control arm and through its own D-ring on the right rear and left rear of the truck.
3. Hold both body protection boards up against the truck with the first piece of honeycomb positioned at the rear of the truck.
4. Run the 15-foot tiedown straps positioned in step 1 above around the boards on the right front and left front of the truck. Secure the ends with D-rings and a load binder.
5. Repeat the procedures in step 4 above for the right rear and left rear of the truck.

Figure 5-22. Body protection boards installed

5-10. Securing Top Tow Plate

Secure the top tow plate as shown in Figure 5-23.

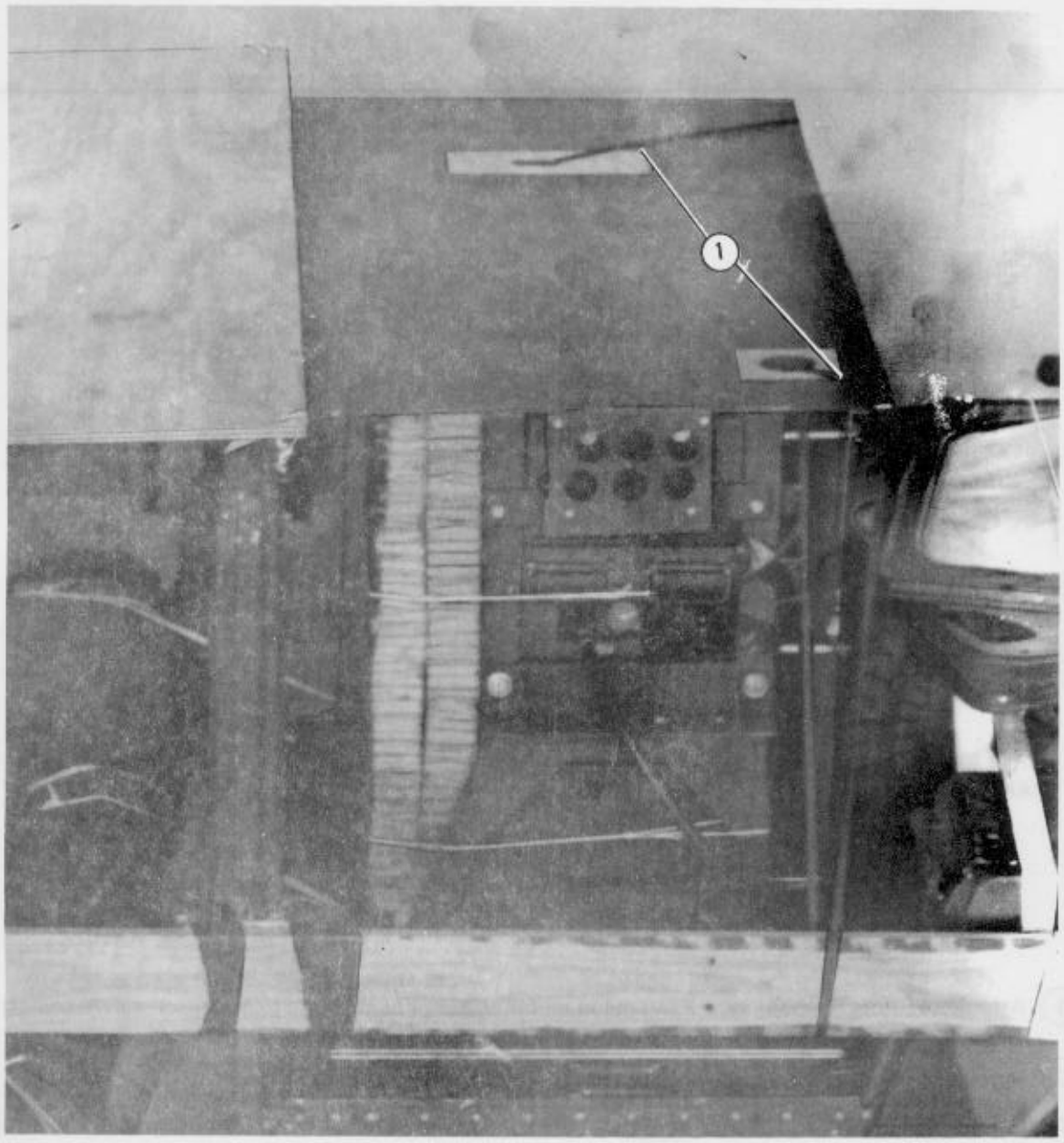

(1) Pass a length of 1/2-inch tubular nylon webbing through each of the large holes on the top tow plate. Secure the webbing to a convenient point on the load.

Figure 5-23. Top tow plate secured

5-11. Installing Suspension Slings and Deadman's Tie

Install the suspension slings and the deadman's tie as shown in Figure 5-24.

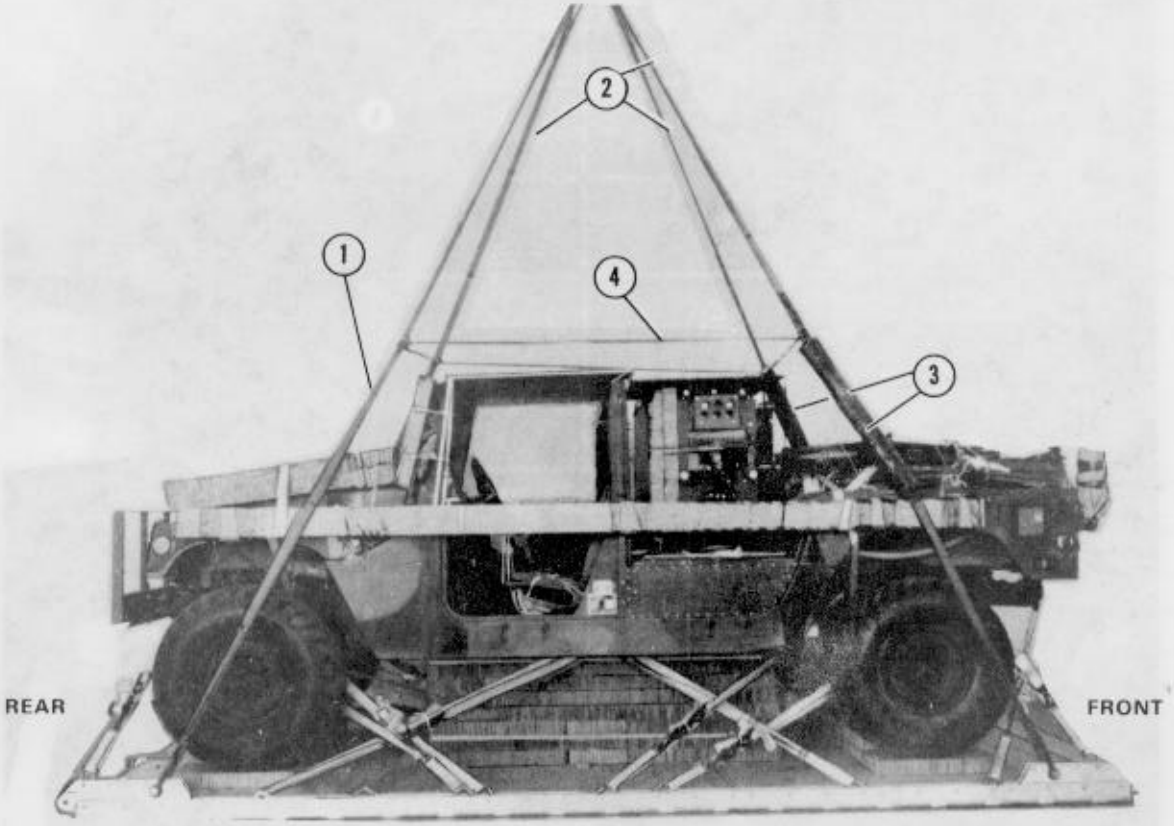

1. Attach a 16-foot (2-loop), type XXVI nylon webbing suspension sling to a large clevis. Attach the clevis to one of the tandem links.
2. Repeat the procedure in step 1 above for the other three tandem links.
3. Position a 12- by 36-inch piece of felt on the front suspension slings 52 inches above the large clevis. Secure the felt in place with type III nylon cord and tape.
4. Raise the four suspension slings above the load, and install a deadman's tie according to FM 10-500/TO 13C7-1-5.

Figure 5-24. Suspension slings and deadman's tie installed

5-12. Stowing Cargo Parachutes

Use two G-11B or three G-11A cargo parachutes on this load. Stow the cargo parachutes as described below.

a. G-11B. Stow two G-11B cargo parachutes as shown in Figure 5-25.

b. G-11A. Prepare, stow, and restrain three G-11A cargo parachutes on the hood of the vehicle according to FM 10-500/TO 13C7-1-5. Install additional tiedown clevises to bushing 25 behind each front suspension link for additional restraint needed for a three-parachute load.

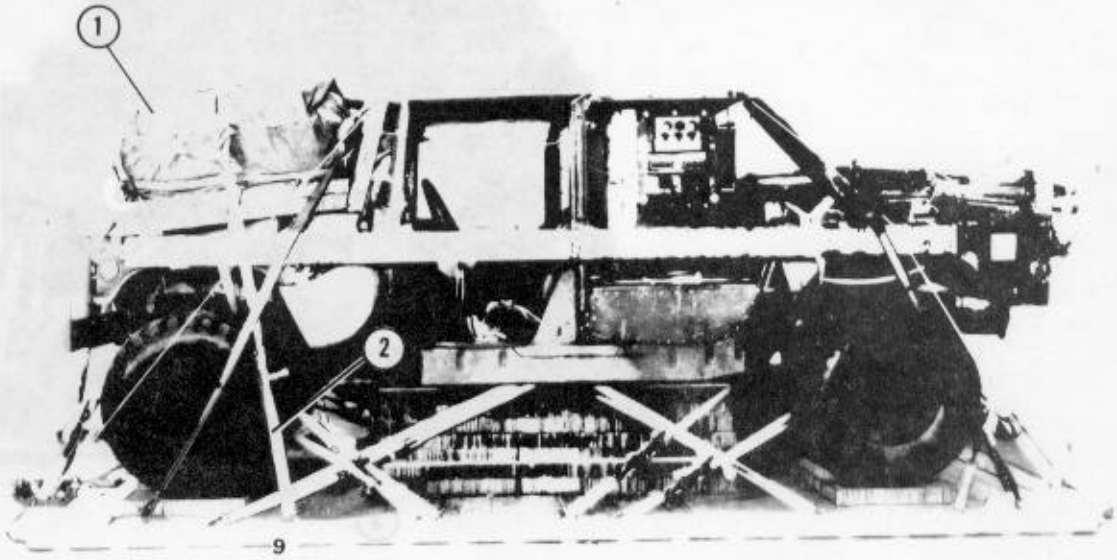

(1) Prepare two G-11B cargo parachutes and stow them on the honeycomb positioned on the hood of the vehicle according to FM 10-500/TO 13C7-1-5.

(2) Install a restraint strap according to FM 10-500/TO 13C7-1-5. Secure the restraint strap to clevises 9 and 9A.

Figure 5-25. Cargo parachutes stowed

5-13. Installing Extraction System

Use the EFTC extraction system for this load. Install the components of the EFTC according to FM 10-500/TO 13C7-1-5 and as shown in Figure 5-26.

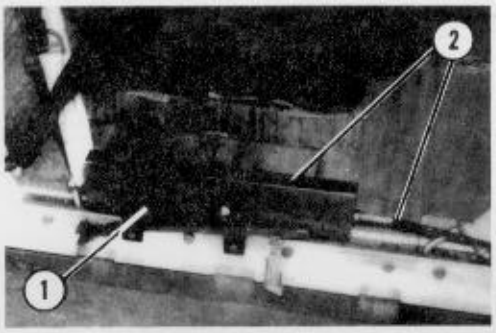

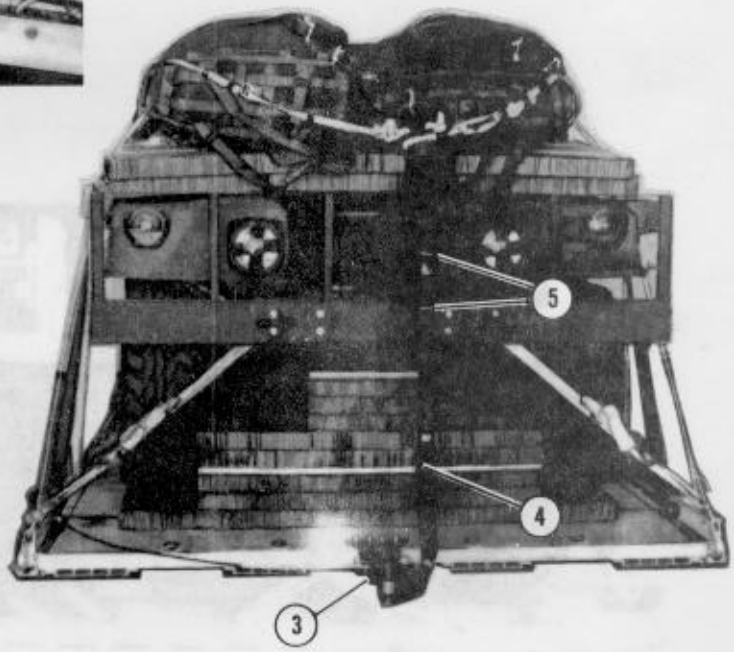

1. Install the EFTC inside and outside mounting brackets in the front mounting holes in the left platform side rail.
2. Install the actuator, and attach a 16-foot cable. Route the cable to the insides of the lashings, and safety it to one of the lashings with type I, 1/4-inch cotton webbing.
3. Install the latch assembly, and attach the cable using the short extraction link.
4. Install a 16-foot (2-loop), type XXVI nylon webbing deployment line on the load.
5. S-fold the deployment line, and tie the folds in two places with type I, 1/4-inch cotton webbing.

Figure 5-26. EFTC installed

5-14. Installing Release System

Install and attach an M-1 cargo parachute release according to FM 10-500/TO 13C7-1-5 and as shown in Figure 5-27.

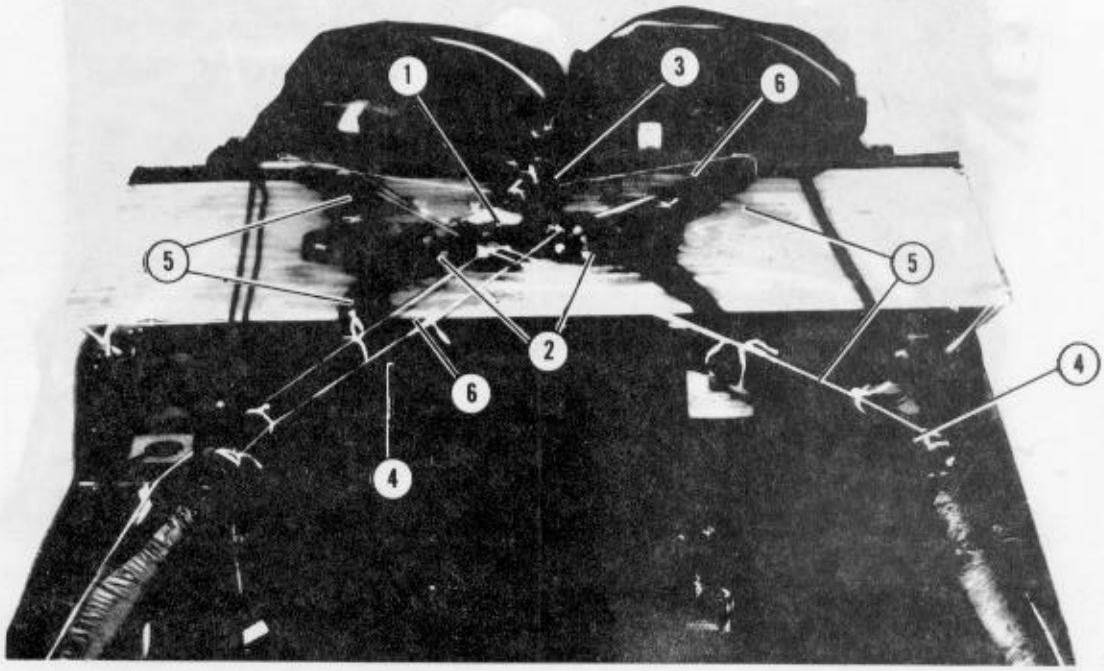

1. Place the M-1 release on the plywood over the driver compartment.
2. Attach the suspension slings to the M-1 release system.
3. Attach the parachute riser extension to the M-1 release system.
4. Safety the suspension slings with type III nylon cord.
5. Fold the excess suspension slings, and tie the folds in place with type I, 1/4-inch cotton webbing.
6. Center the M-1 cargo parachute release on top of the load. Secure the M-1 release with type III nylon cord to clevises 1 and 1A, and 10 and 10A (not shown).

Figure 5-27. M-1 cargo parachute release installed

5-15. Installing Provisions for Emergency Restraints

Install two medium clevises as provisions for the emergency restraints as shown in Figure 5-28.

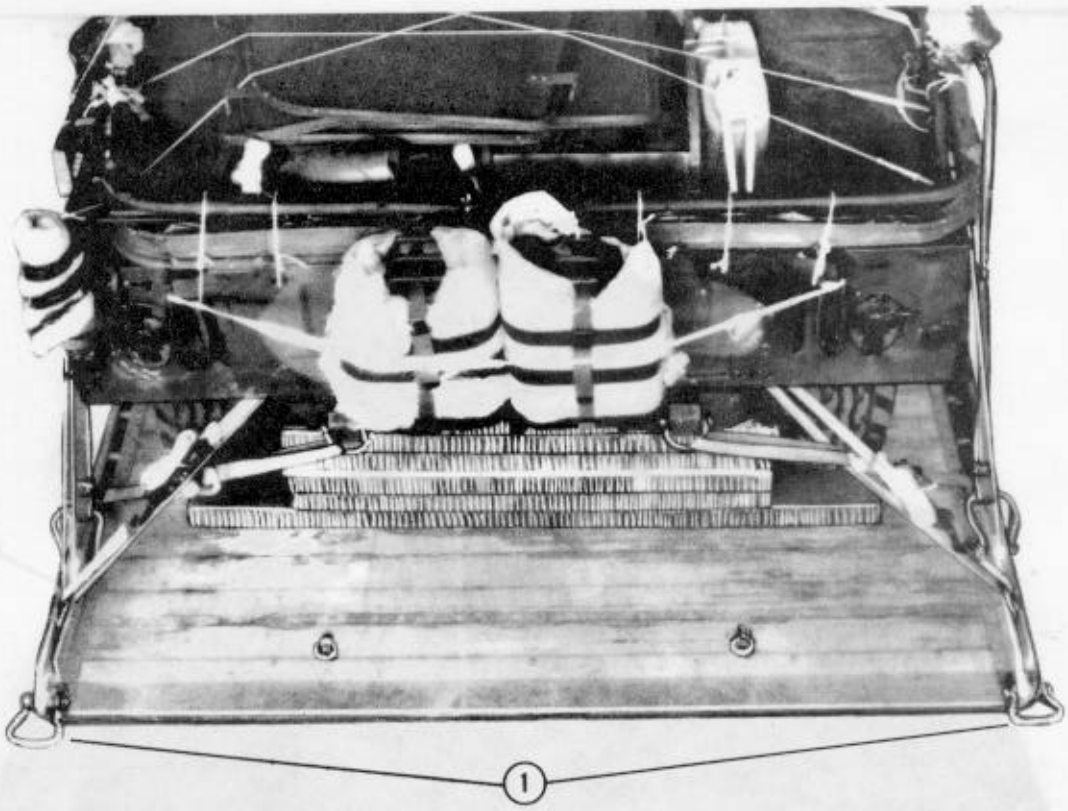

(1) Bolt a medium clevis to each tandem link on the front of the platform. Use spacers between the links and the arms of the clevises.

NOTE: Tying the clevises is not necessary if they are tight enough to remain in the horizontal position. Ties are required only if the clevises do not remain in the horizontal position. Ties will be made with a single length of type I, 1/4-inch cotton webbing.

Figure 5-28. Provisions for emergency restraints installed

5-16. Placing Extraction Parachute

Place the extraction parachute as described below.

a. C-130 Aircraft. Place a 22-foot cargo extraction parachute; a 60-foot (3-loop), type XXVI nylon extraction line rigged in a line bag; and a

3 3/4-inch, two-point link assembly on the load for installation in the aircraft.

b. C-141 Aircraft.

(1) Loads Less Than 10,000 Pounds. Place a 15-foot cargo extraction parachute; a 160-foot (1-loop), type XXVI nylon extraction line packed in a line bag; and a type IV connector link on the load for installation in the aircraft.

(2) Loads Greater Than 10,000 Pounds. Place a 22-foot cargo extraction parachute; a 140-foot (3-loop), type XXVI nylon extraction line packed in a line bag; and a 3 3/4-inch, two-point link assembly on the load for installation in the aircraft.

5-17. Marking Rigged Load

Mark the rigged load according to FM 10-500/TO 13C7-1-5 and as shown in Figure 5-29. Complete DD Form 1387-2 (Special Handling Data/Certification), and securely attach it to the load. Indicate on DD Form 1387-2 that the vehicle fuel tank and the batteries have been prepared according to AFR 71-4/TM 38-250. If the load varies from that shown, the weight, height, CB, and parachute requirements must be recomputed.

CAUTION: Make the final rigger inspection required by FM 10-500/TO 13C7-1-5 before the load leaves the rigging site.

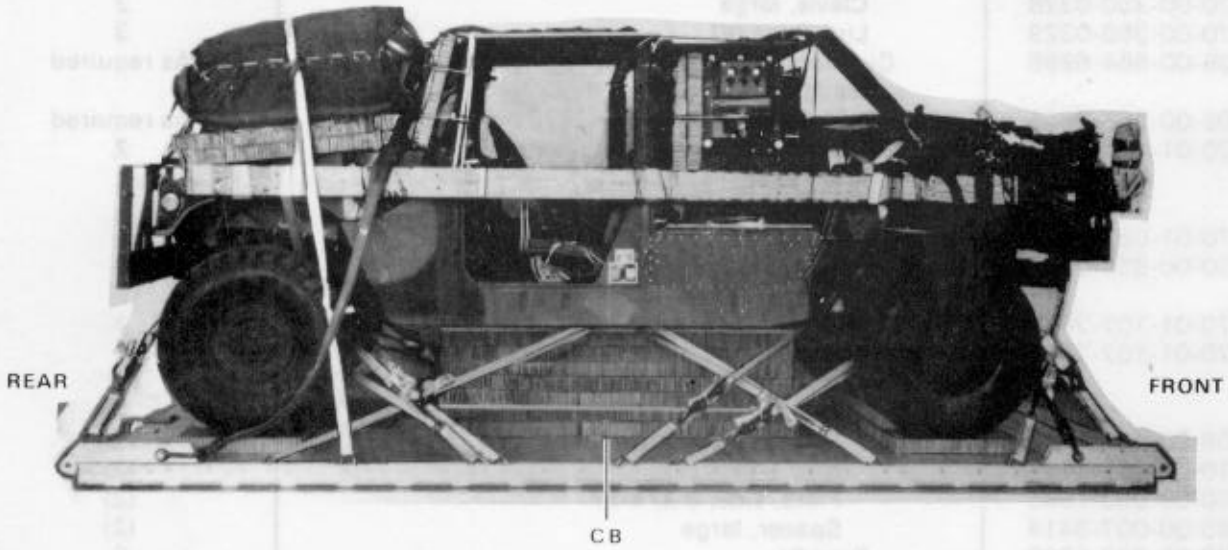

RIGGED LOAD DATA

Weight: Load shown	9,430 pounds
Maximum load allowed	10,000 pounds
Height: Two parachutes	85 inches
Three parachutes	98 inches
Width	108 inches
Length	192 inches
Overhang: Front	4 inches
Rear	19 inches
CB (from front edge of platform)	101 inches

Figure 5-29. M998 with GRC/206 Air Force pallet rigged for low-velocity airdrop on a type V platform

5-18. Equipment Required

Use the equipment listed in Table 5-2 to rig this load.

Table 5-2. Equipment required for rigging the M998 with GRC/206 Air Force pallet on a type V airdrop platform for low-velocity airdrop

National Stock Number	Item	Quantity
1670-00-162-4979	Adapter, link assembly	1
8040-00-273-8713	Adhesive, paste, 1-gal	As required
1670-00-568-0323	Band, rubber, retainer	As required
	Clevis, suspension:	
4030-00-678-8562	3/4-in (medium)	6
4030-00-090-5354	1-in (large)	5
4020-00-240-2146	Cord, nylon, type III, 550-lb	As required
1670-00-434-5785	Coupling, airdrop, extraction force transfer w 16-ft cable	1
	Cover:	
1670-00-360-0328	Clevis, large	3
1670-00-360-0329	Link (type IV)	3
8135-00-664-6958	Cushioning material, packaging, cellulose wadding	As required
8305-00-958-3685	Felt, 1/2-in thick	As required
1670-01-183-2678	Leaf, extraction line (sling/extraction line panel)	2
	Line, extraction:	
1670-01-062-6313	60-ft (3-loop), type XXVI nylon webbing	1
1670-00-856-0266	60-ft (3-loop), type X nylon webbing (use w 22-ft parachute)	1
1670-01-107-7651	140-ft (3-loop), type XXVI nylon webbing	1
1670-01-107-7652	160-ft (1-loop), type XXVI nylon webbing	1
	Link assembly:	
	Two-point:	1
5306-00-435-8994	Bolt, 1-in diam, 4-in long	(2)
5310-00-232-5165	Nut, 1-in	(2)
1670-00-003-1953	Plate, side, 3 3/4-in	(2)
5365-00-007-3414	Spacer, large	(2)
1670-00-783-5988	Type IV	3
5510-00-220-6448	Lumber, 2- by 6-in:	
	16-in	1
	150-in	2
1670-00-753-3928	Pad, energy-dissipating, honeycomb,	
	3- by 36- by 96-in:	14 sheets
	6- by 10-in	(10)
	6- by 24-in	(2)
	8- by 24-in	(2)
	8- by 54-in	(6)
	10- by 10-in	(5)
	12- by 12-in	(1)
	12- by 22-in	(8)
	12- by 54-in	(4)
	12- by 82-in	(2)
	20- by 6-in	(8)
	20- by 24-in	(2)

Table 5-2. Equipment required for rigging the M998 with GRC/206 Air Force pallet on a type V airdrop platform for low-velocity airdrop (continued)

National Stock Number	Item	Quantity
	20- by 40-in	(1)
	21- by 83-in	(1)
	33- by 40-in	(2)
	36- by 82-in	(2)
	42- by 10-in	(2)
	54- by 24-in	(8)
	80- by 24-in	(2)
	Parachute:	
	Cargo:	
1670-00-269-1107	G-11A *or*	3
1670-01-016-7841	G-11B	2
	Cargo extraction:	
1670-01-063-3715	15-ft *or*	1
1670-00-052-1548	15-ft	1
1670-01-063-3716	22-ft *or*	1
1670-00-687-5458	22-ft	1
	Platform, AD, type V, 16-ft:	1
	Bracket:	
1670-01-162-2375	Inside EFTA	(1)
1670-01-162-2374	Outside EFTA	(1)
1670-01-162-2372	Clevis, load tiedown	(22)
1670-01-162-2376	Extraction bracket assembly	(1)
1670-01-162-2381	Tandem link	(4)
5530-00-128-4981	Plywood, 3/4-in:	
	6- by 20-in	4
	8- by 54-in	2
	10- by 10-in	2
	12- by 54-in	2
	24- by 54-in	2
	36- by 82-in	1
1670-01-097-8816	Release, cargo parachute, M-1	1
	Sling, cargo, airdrop:	
	For deployment line:	
1670-01-063-7761	16-ft (2-loop), type XXVI nylon webbing	1
	For lifting:	
1670-01-062-6301	3-ft (2-loop), type XXVI nylon webbing	2
1670-01-062-6304	9-ft (2-loop), type XXVI nylon webbing	2
1670-01-062-6303	12-ft (2-loop), type XXVI nylon webbing	2
	For riser extensions:	
1670-00-823-5043	20-ft (3-loop), type X nylon webbing *or*	6
1670-01-062-6302	20-ft (2-loop), type XXVI nylon webbing	6
	For suspension slings:	
1670-01-063-7761	16-ft (2-loop), type XXVI nylon webbing	4
1670-00-998-0116	Strap, parachute release, w fastener and release knife	2
7510-00-266-5016	Tape, adhesive, 2-in	As required

Table 5-2. Equipment required for rigging the M998 with GRC/206 Air Force pallet on a type V airdrop platform for low-velocity airdrop (continued)

National Stock Number	Item	Quantity
1670-00-937-0271	Tiedown assembly, 15-ft	32
	Webbing:	
8305-00-268-2411	Cotton, type I, 1/4-inch	As required
	Nylon, tubular:	
8305-00-082-5752	1/2-in, natural	As required
8305-00-268-2453	1/2-in, olive drab	As required
8305-00-263-3591	Type VIII	As required