CHAPTER 1
RIGGING THE M996 AMBULANCE ON A TYPE V PLATFORM

Section I
LOW-VELOCITY AIRDROP

1-1. Description of Load

The M996 ambulance (Figure 1-1) is rigged on a 20-foot, type V platform for low-velocity airdrop. The load requires two G-11 cargo parachutes.

1-2. Preparing Platform

Prepare a 20-foot, type V platform as described below.

a. Inspecting Platform. Inspect, or assemble and inspect, the platform according to TM 10-1670-268-20&P/TO 13C7-52-22.

Note: If the platform must be assembled, install the suspension links when assembling the platform. See Figure 1-2 for the location of the suspension links.

b. Installing Suspension Links. Install the suspension links on assembled platforms as described in Figure 1-2.

c. Installing Tandem Links. Install tandem links as shown in Figure 1-2.

d. Attaching and Numbering Clevises. Attach and number 26 clevis assemblies as shown in Figure 1-2.

Notes: 1. The nose bumper may or may not be installed.
2. Measurements given in this section are from the front edge of the platform, NOT from the front edge of the nose bumper.

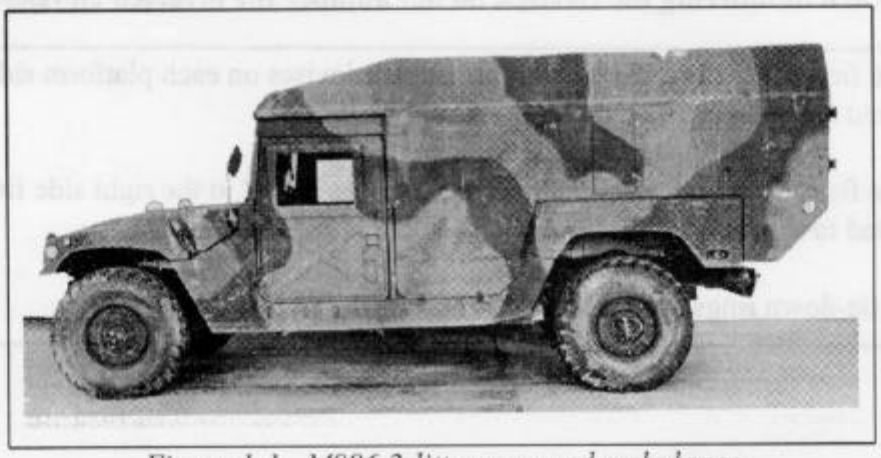

Figure 1-1. M996 2-litter armored ambulance

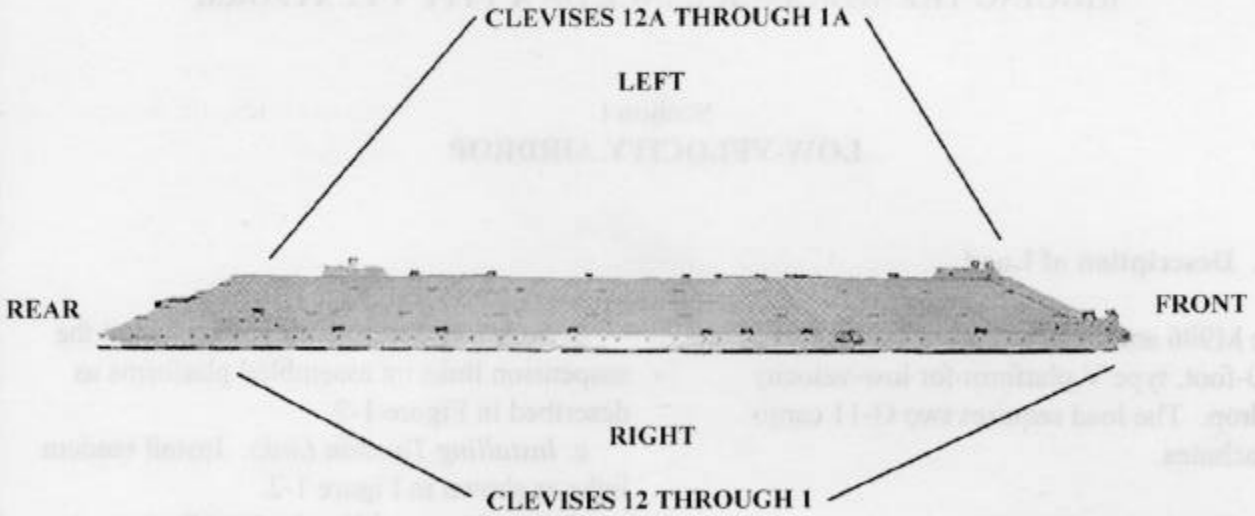

1. Install a suspension link on bushing holes 33, 34, and 35 on each platform side rail.

2. Install a tandem link on the front of each platform side rail using holes 1, 2, and 3.

3. Install clevises on bushings 1 and 2 on each tandem link.

4. Install a clevis on bushing 2 on each suspension link.

5. Install a clevis on bushing 11 in an inverted position on each platform side rail. Bolt two additional clevises to each inverted clevis.

Note: When numbering the clevises, do not number the inverted clevises.

6. Starting at the front of each platform side rail, install clevises on each platform side rail using the bushings bolted on holes 6, 13, 15, 17, 22, 27, and 31.

7. Starting at the front of the platform, number the clevises bolted to the right side from 1 through 12 and those bolted to the left side from 1A through 12A.

8. Number the tie-down rings according to FM 10-500-2/TO 13C7-1-5.

Figure 1-2. Platform prepared

1-3. Preparing and Positioning Honeycomb Stacks

Prepare three honeycomb stacks using the material in Table 1-1 and as shown in Figures 1-3 and 1-4. Position the stacks on the platform according to FM 10-500-2/TO 13C7-1-5 and as shown in Figure 1-5.

Table 1-1. Material required to build honeycomb stacks

Stack Number	Pieces	Width (Inches)	Length (Inches)	Material	Instructions
1	1	80	24	Honeycomb	See Figure 1-3.
	4	54	24	Honeycomb	
	1	54	24	3/4-inch plywood	
	4	20	6	Honeycomb	
	1	20	24	Honeycomb	
	2	20	6	3/4-inch plywood	
2	2	30	54	Honeycomb	See Figure 1-4.
	1	42	10	Honeycomb	
	4	12	22	Honeycomb	
	4	12	54	Honeycomb	
	5	10	10	Honeycomb	
	2	12	54	3/4-inch plywood	
	2	10	10	3/4-inch plywood	
	6	8	54	Honeycomb	
	2	8	54	3/4-inch plywood	
	2	6	24	Honeycomb	
	2	8	24	Honeycomb	
3	2	80	24	Honeycomb	See Figure 1-3.
	4	54	24	Honeycomb	
	1	54	24	3/4-inch plywood	
	4	20	6	Honeycomb	
	1	20	24	Honeycomb	
	2	20	6	3/4-inch plywood	

Note: This drawing is not drawn to scale.

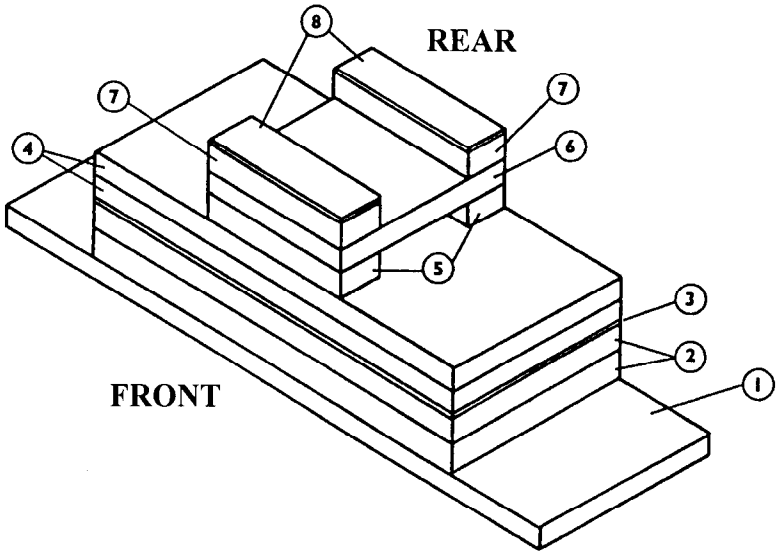

(1) Use an 80- by 24-inch piece of honeycomb to form a base.

(2) Center two 54- by 24-inch pieces of honeycomb on the base.

(3) Place a 3/4- by 54- by 24-inch piece of plywood on top of the honeycomb placed in step 2 above.

(4) Place two 54- by 24-inch pieces of honeycomb on top of the plywood placed in step 3 above.

(5) Center one 20- by 6-inch piece of honeycomb even with the front edge of the stack. Center another 20- by 6-inch piece of honeycomb even with the rear edge of the stack.

(6) Place a 20- by 24-inch piece of honeycomb flush over the pieces of honeycomb placed in step 5 above to form a bridge.

(7) Center one 20- by 6-inch piece of honeycomb even with the front edge of the stack. Center another 20- by 6-inch piece of honeycomb even with the rear edge of the stack.

(8) Place a 3/4- by 20- by 6-inch piece of plywood on top of each piece of honeycomb placed in step 7 above.

Figure 1-3. Stacks 1 and 3 prepared

Note: This drawing is not drawn to scale.

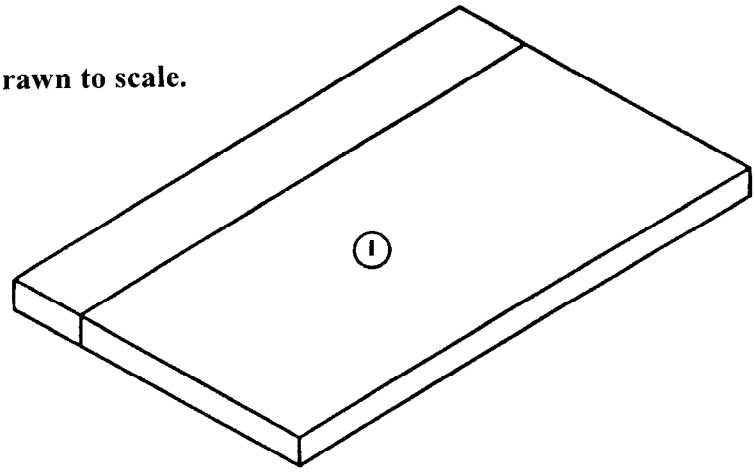

(1) Place a 30- by 54-inch piece of honeycomb alongside a 12- by 54-inch piece.

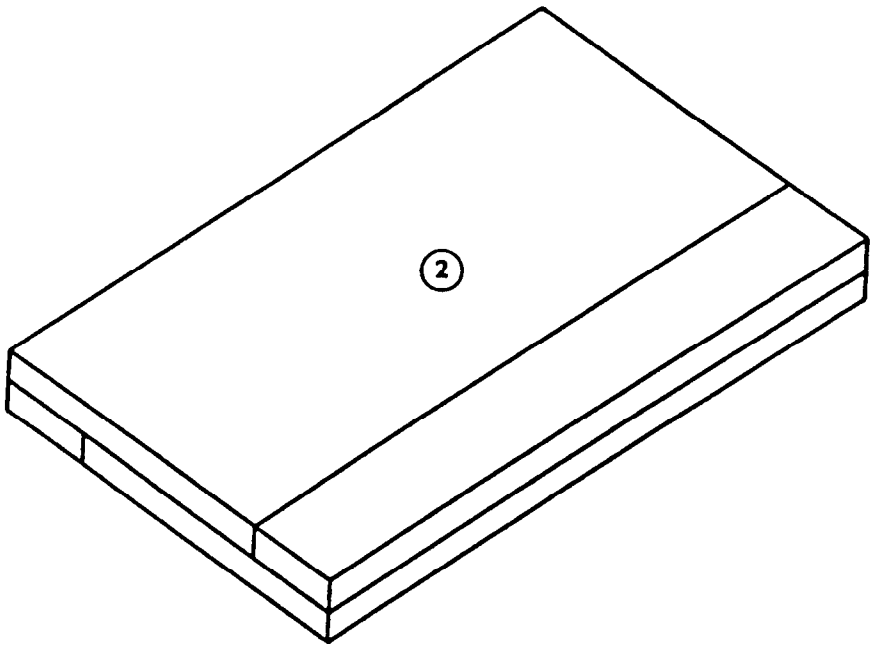

(2) Alternate a 30- by 54-inch piece of honeycomb and a 12- by 54-inch piece over the honeycomb placed in step 1 to make a two-layer base.

Figure 1-4. Stack 2 prepared

Note: These drawings are not drawn to scale.

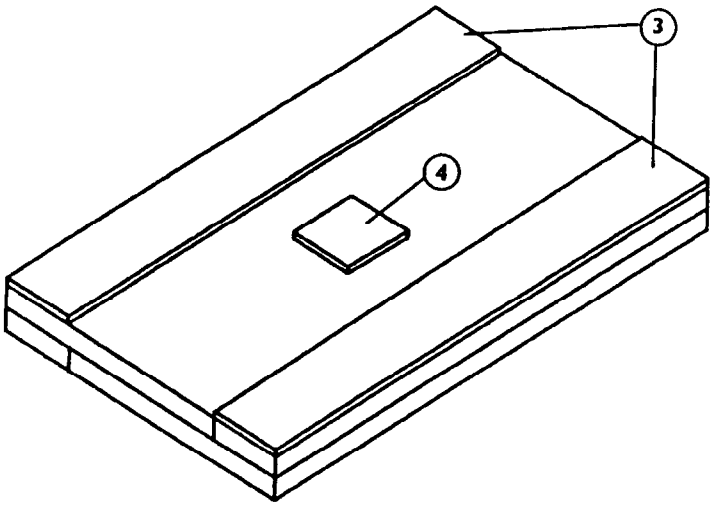

(3) Place a 3/4- by 12- by 54-inch piece of plywood flush along each side of the honeycomb as shown.

(4) Center a 3/4- by 10- by 10-inch piece of plywood on the honeycomb base.

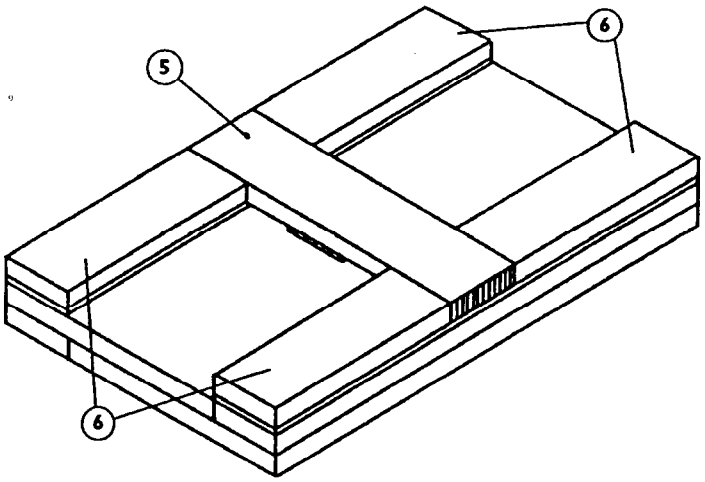

(5) Center a 10- by 42-inch piece of honeycomb to form a bridge.

(6) Place a 12- by 22-inch piece of honeycomb over each leg perpendicular to the bridge.

Figure 1-4. Stack 2 prepared (continued)

Note: These drawings are not drawn to scale.

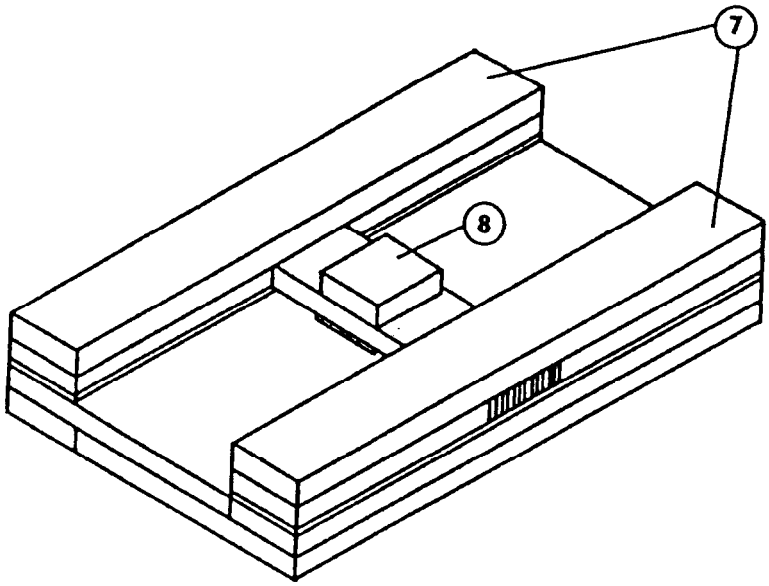

7 Place a 12- by 54-inch piece of honeycomb flush over each side of the stack.

8 Center a 10- by 10-inch piece of honeycomb over the bridge.

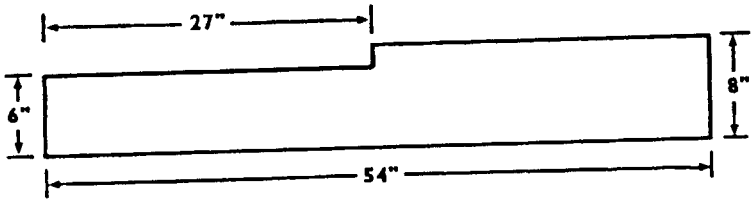

9 Make cutouts as shown in six 8- by 54-inch pieces of honeycomb.

10 Make the same cutouts in two 3/4- by 8- by 54-inch pieces of plywood.

Figure 1-4. Stack 2 prepared (continued)

Note: This drawing is not drawn to scale.

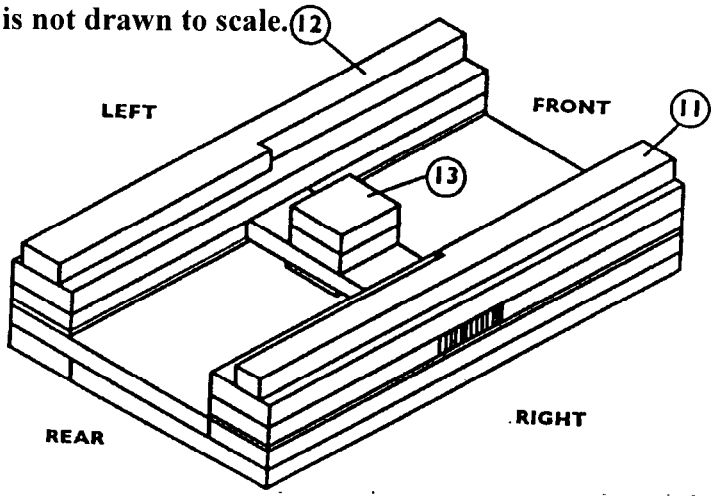

(11) Center one piece of honeycomb cut in step 9 over the right side of the stack so that the cutout is to the rear.

(12) Center one piece of honeycomb cut in step 9 over the left side of the stack so that the cutout is to the front.

(13) Center a 10- by 10-inch piece of honeycomb over the bridge.

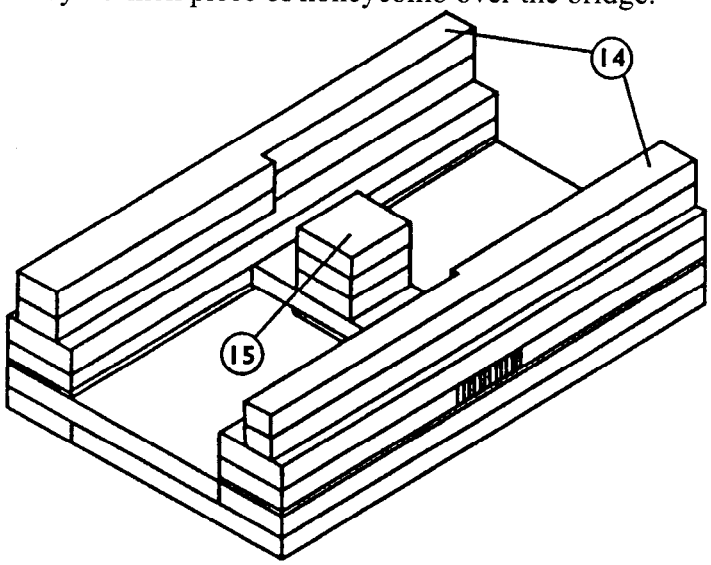

(14) Place a piece of the honeycomb cut in step 9 flush over each side of the stack so that the cutouts are aligned.

(15) Place a 10- by 10-inch piece of honeycomb flush over the bridge.

Figure 1-4. Stack 2 prepared (continued)

Note: This drawing is not drawn to scale.

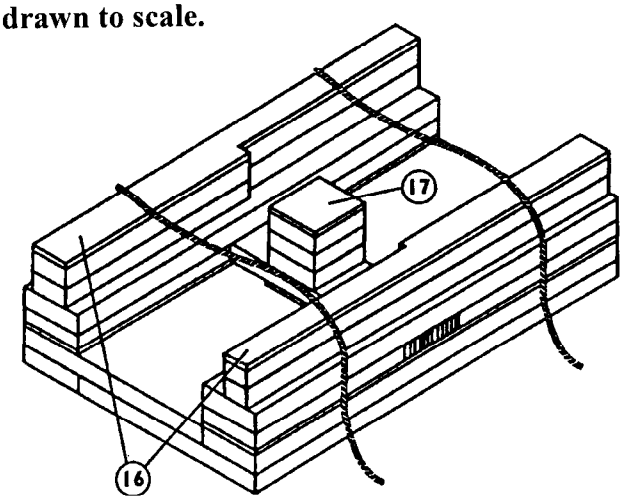

(16) Place a piece of the plywood cut in step 10 flush over each side of the stack so that the cutouts are aligned. Lay two 110-inch lengths of 1/2-inch tubular nylon webbing across both sides of the stack and 12 inches from each end.

(17) Place a 3/4- by 10- by 10-inch piece of plywood flush over the bridge.

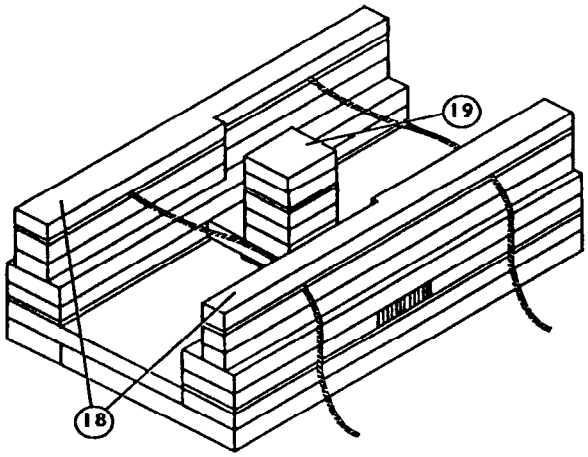

(18) Place a piece of the honeycomb cut in step 9 flush over each side of the stack so that the cutouts are aligned.

(19) Place a 10- by 10-inch piece of honeycomb flush over the bridge.

Figure 1-4. Stack 2 prepared (continued)

Note: This drawing is not drawn to scale.

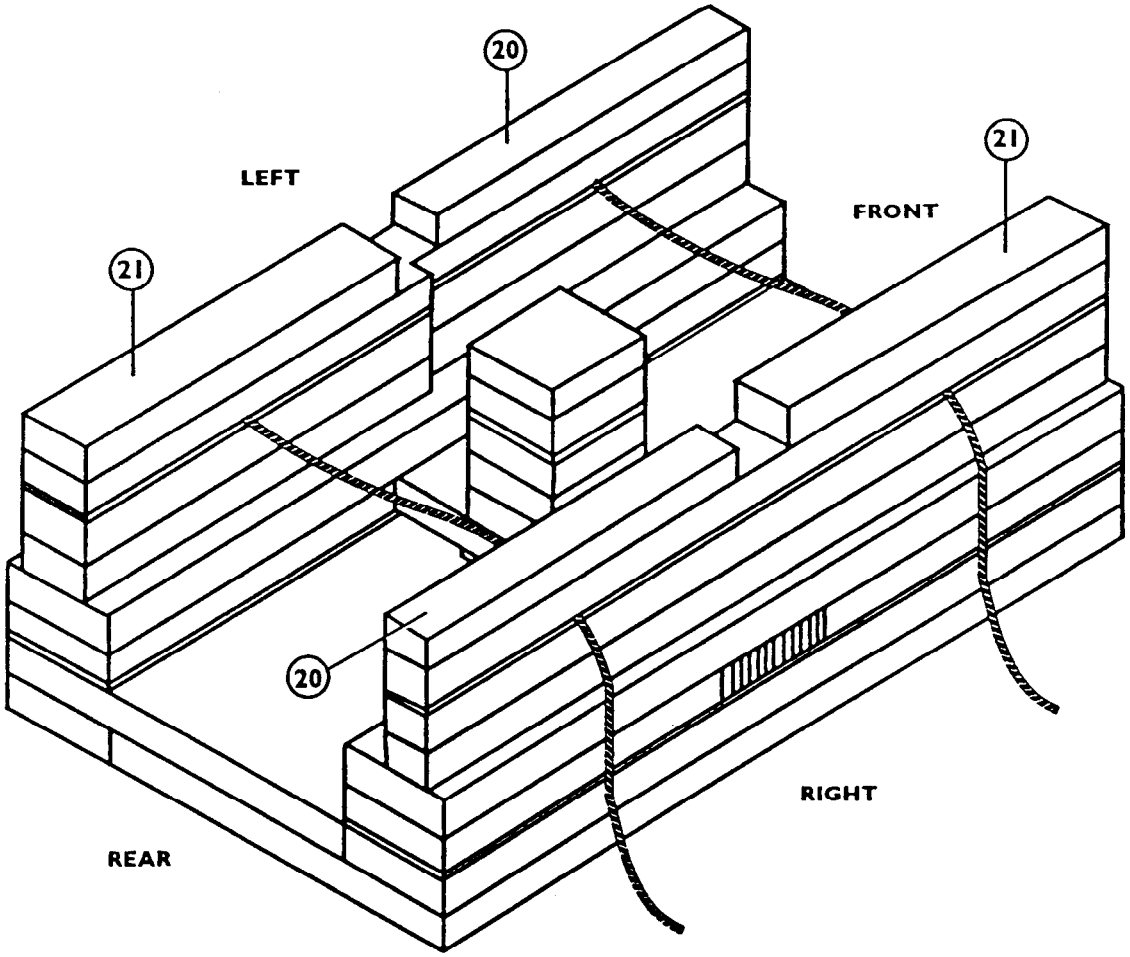

(20) Place a 6- by 24-inch piece of honeycomb flush with the left front edge of the stack. Place another 6- by 24-inch piece of honeycomb flush with the right rear edge of the stack.

(21) Place an 8- by 24-inch piece of honeycomb flush with the right front edge of the stack. Place another 8- by 24-inch piece of honeycomb flush with the left rear edge of the stack.

Figure 1-4. Stack 2 prepared (continued)

Note: This drawing is not drawn to scale.

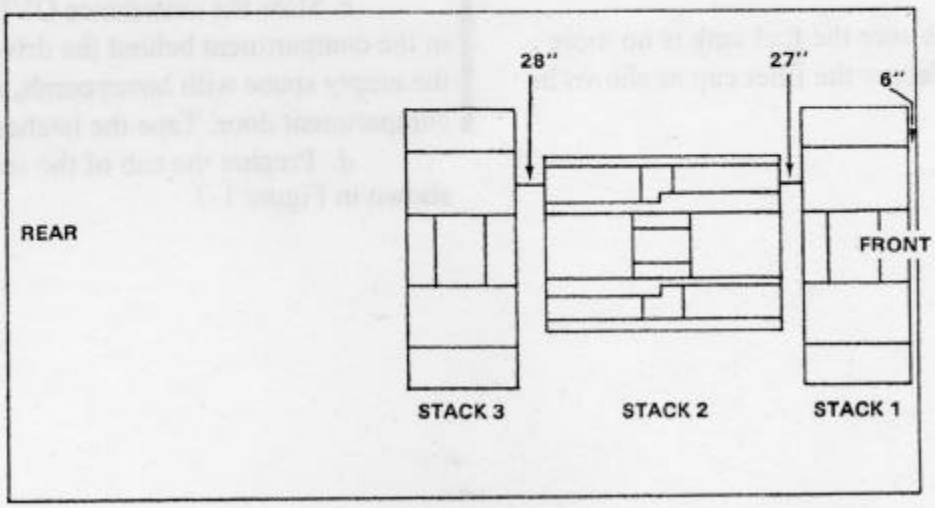

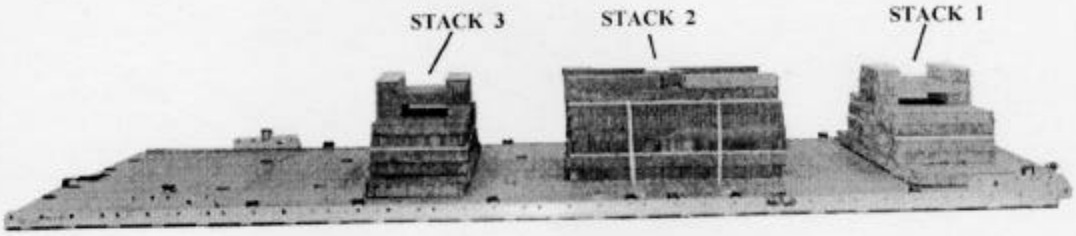

Stack Number	Position of Stack on Platform
	Place stack:
1	Centered 6 inches from the front edge of the platform.
2	Centered 27 inches from stack 1.
3	Centered 28 inches from stack 2.

Figure 1-5. Honeycomb stacks positioned on platform

1-4. Preparing Ambulance

Prepare the ambulance as described below.

a. Make sure the fuel tank is no more than 1/2 full. Secure the filler cap as shown in Figure 1-6.

b. Make sure the batteries and battery compartment comply with AFJMAN 24-204/ TM 38-250.

c. Stow the ambulance OVE equipment in the compartment behind the driver's door. Fill the empty space with honeycomb, and close the compartment door. Tape the latches.

d. Prepare the cab of the ambulance as shown in Figure 1-7.

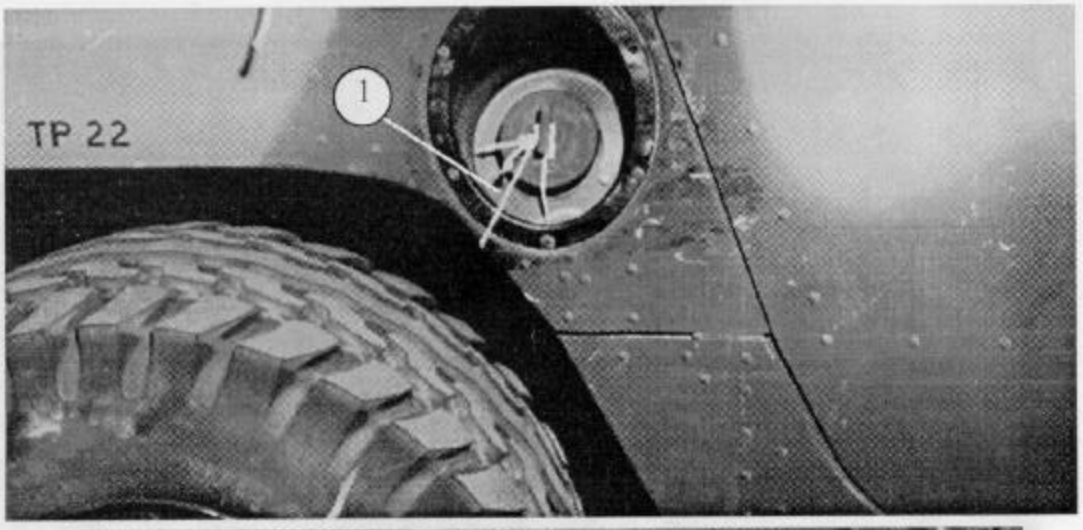

(1) Tie the fuel filler cap to the body of the ambulance as shown.

(2) Tape the fuel filler opening.

Figure 1-6. Filler cap secured

e. Prepare the cab of the ambulance as shown in Figure 1-7.

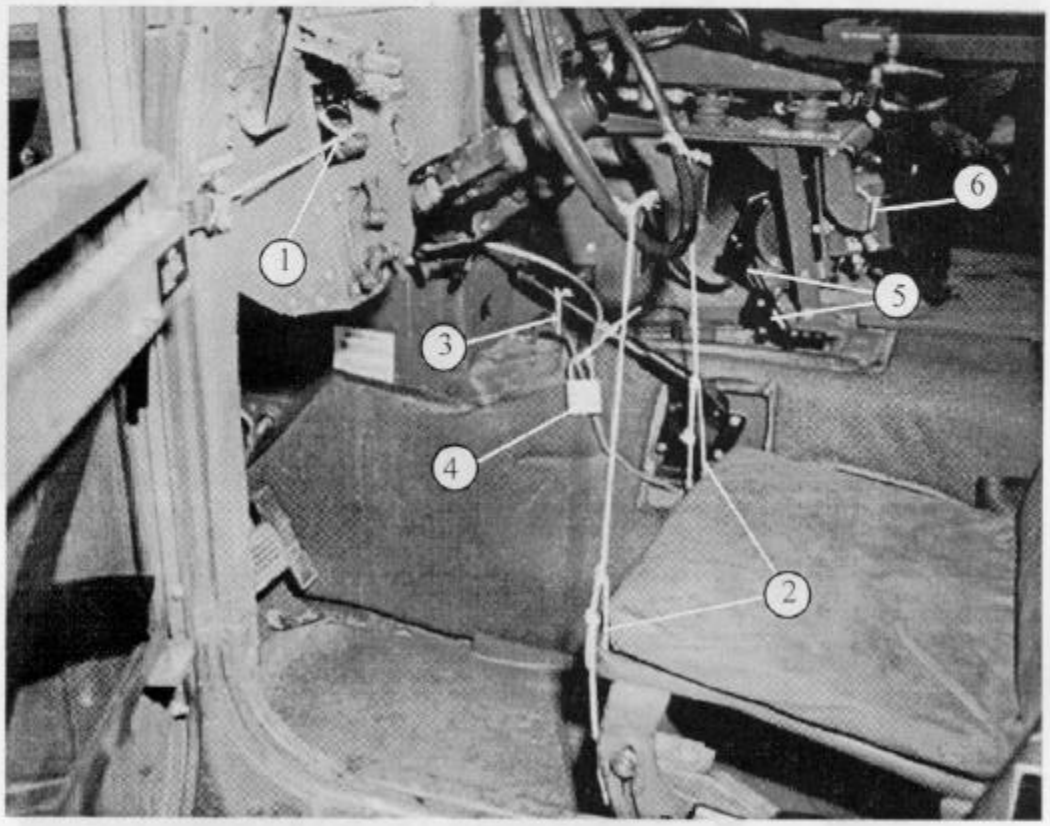

(1) Tie the engine start switch in the engine STOP position with type I, 1/4-inch cotton webbing.

(2) Tie the steering wheel to the seat frame in two places with type III nylon cord.

(3) Tie the emergency brake handle in the OFF position with type III nylon cord.

(4) Secure the steering wheel locking cable and padlock to the emergency brake handle with type III nylon cord.

(5) Place the transmission lever and four-wheel drive lever in the neutral position.

(6) Tie the fire extinguisher in place under the radio mount with two lengths of type III nylon cord.

Figure 1-7. Cab prepared

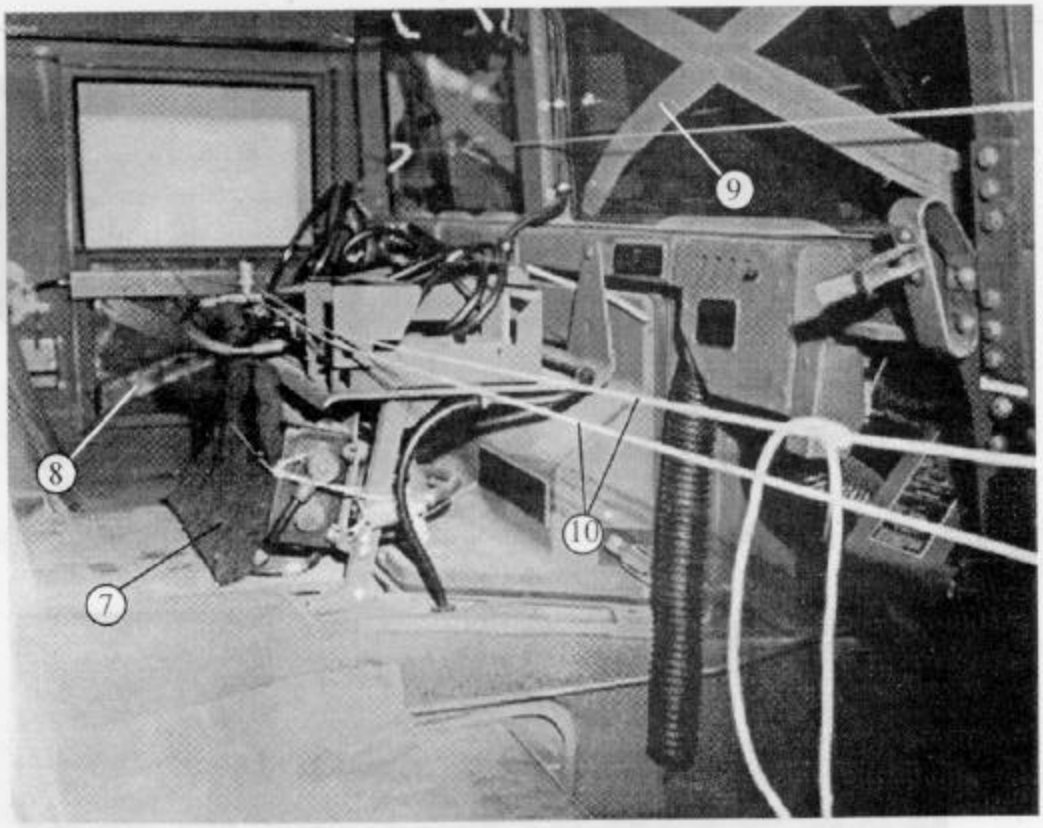

(7) Cut a piece of felt to fit the face of the radio. Place it on the radio, and tie it to the radio mount supports with type III nylon cord.

Note: Pad the controls of any other radio equipment in the same way. Tie larger radios to their mounts with 1/2-inch tubular nylon webbing.

(8) Tape the side windows on both sides and lower them.

(9) Tape the windshield on both sides.

(10) Tie the doors shut with type III nylon cord.

Figure 1-7. Cab prepared (continued)

f. Prepare the underside of the ambulance as shown in Figure 1-8.

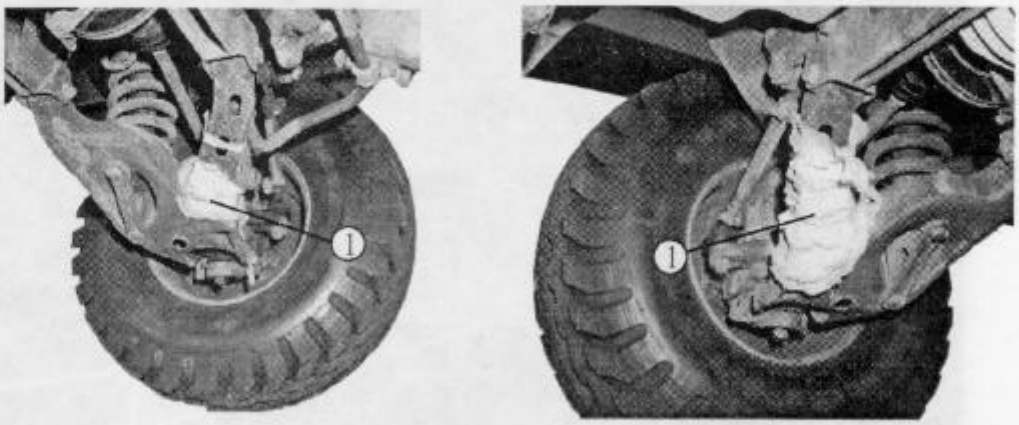

(1) Pad the lower control arms on the front and rear of the truck with cellulose wadding. Tape the wadding in place.

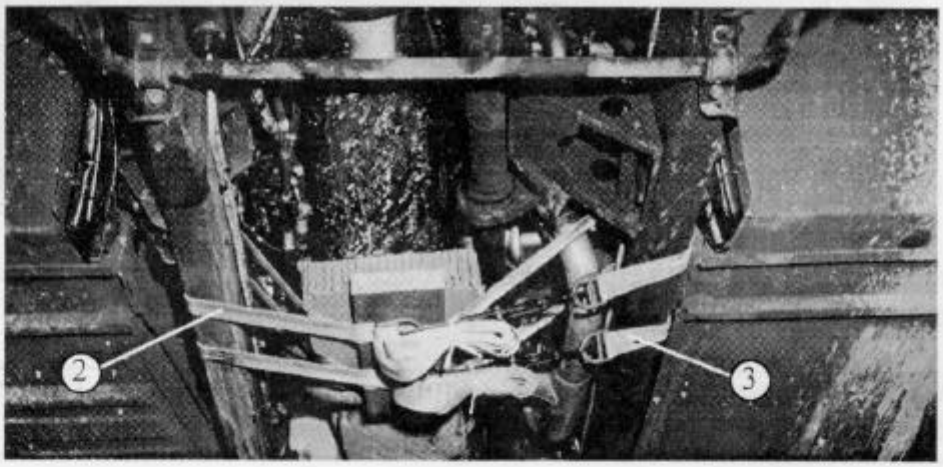

(2) Pass a 15-foot lashing over the right frame rail, under the oil pan, and over the left frame rail. Make sure the wires running along the frame rail are to the outside of the lashing. Place a 12- by 12-inch piece of honeycomb and a 2- by 6- by 16-inch piece of lumber between the lashing and oil pan. Fasten the lashing with a D-ring and a load binder.

(3) Install another lashing just to the rear of the lashing installed in step 2 above. Make sure the lashing goes over the exhaust pipe and then under it.

Figure 1-8. Underside of ambulance prepared

g. Prepare the front of the ambulance as shown in Figure 1-9.

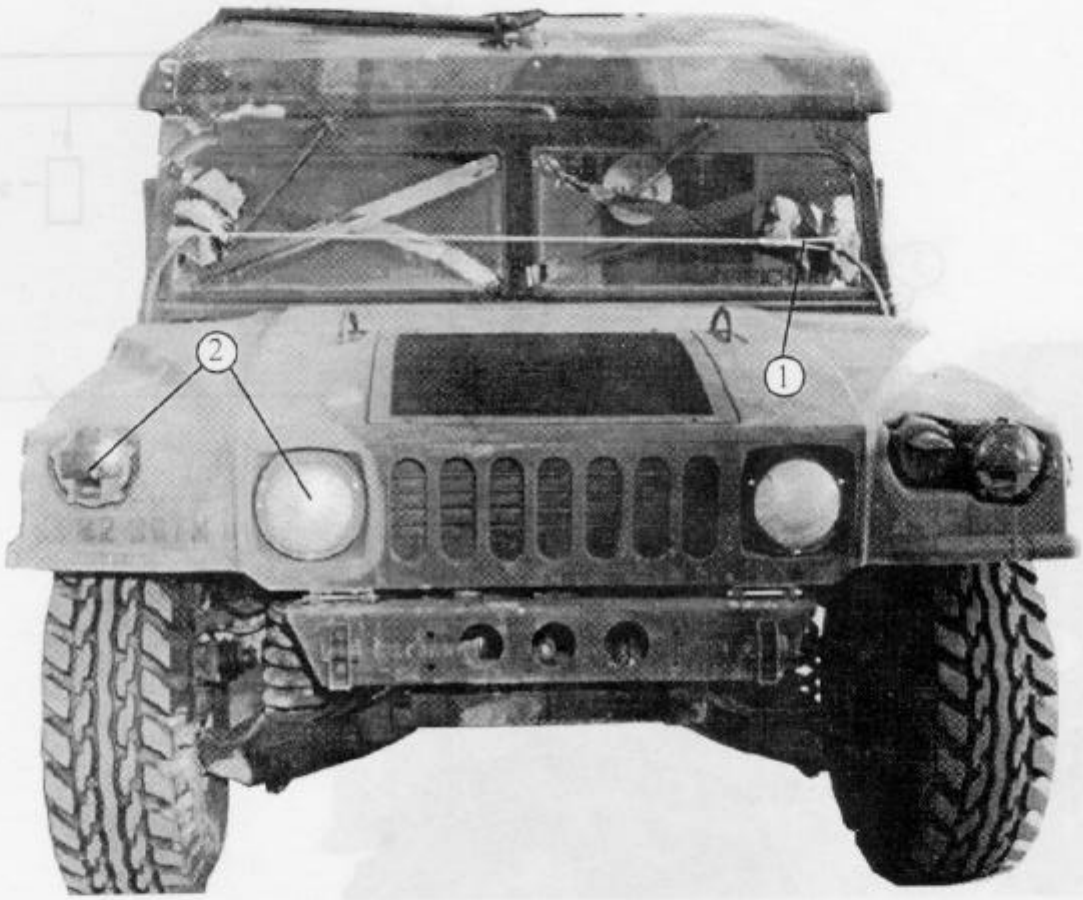

① Pad the mirrors with cellulose wadding, and tape the cellulose wadding in place. Fold the mirrors inward and tie them together with type III nylon cord.

② Tape all lights and reflectors.

Note: Burlap or sandbag material may be stretched over the headlights and held in place by the headlight securing rings.

Figure 1-9. Front of ambulance prepared

Note: This drawing is not drawn to scale.

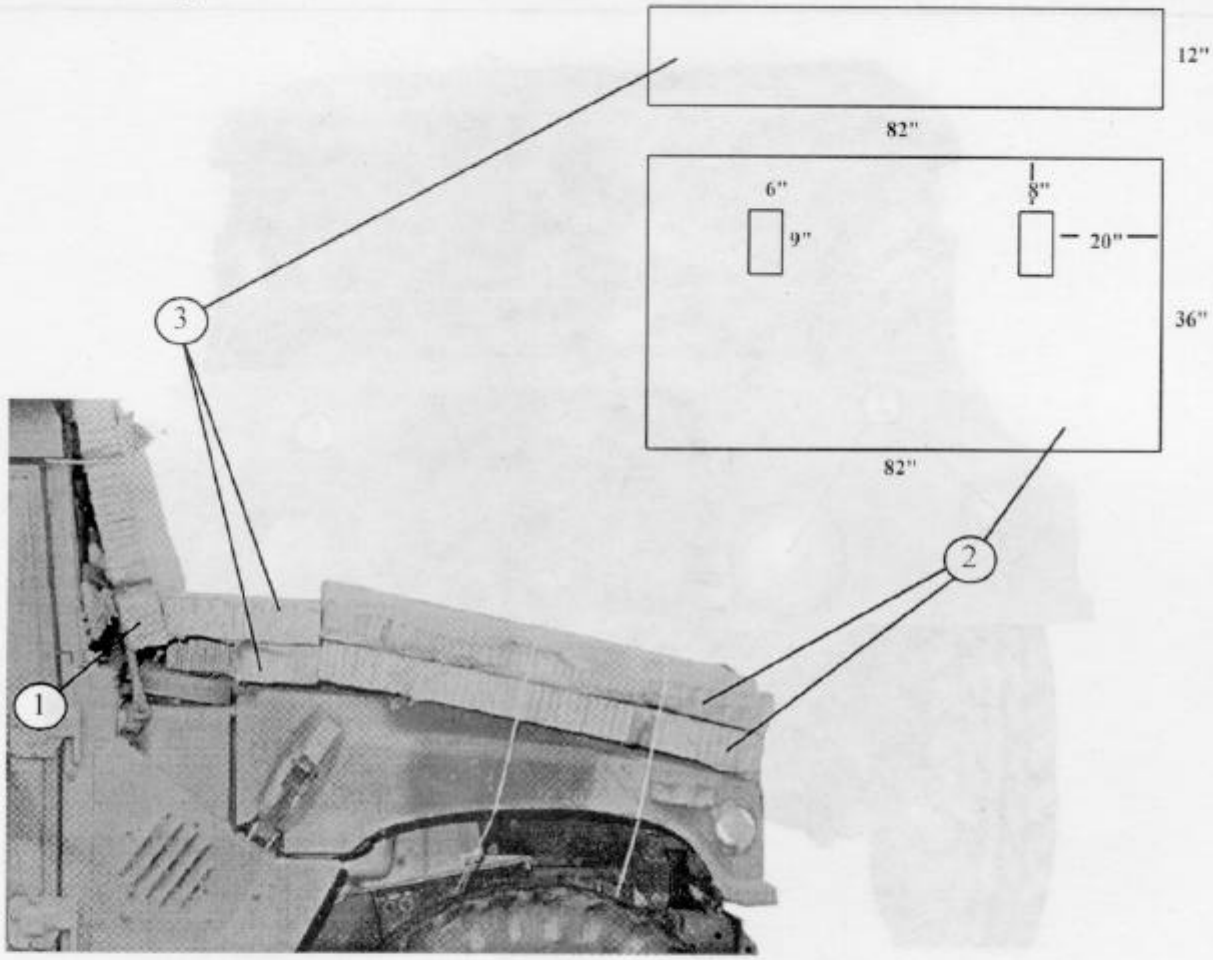

(1) Place a 21- by 83-inch piece of honeycomb over the outside of the windshield and mirrors. Tie the honeycomb to the windshield with a length of type III nylon cord.

(2) Make cutouts in two 36- by 82-inch pieces of honeycomb as shown, and place the honeycomb on the hood. Tie the honeycomb in place with two lengths of type III nylon cord. Tie one length of cord to the coil springs and the other length to the upper suspension arms.

(3) Place two 12- by 82-inch pieces of honeycomb between the windshield and the pieces of honeycomb placed in step 2 above. Make a cutout 10 inches wide and 5 inches long in the bottom piece to clear the air breather cap.

Figure 1-10. Honeycomb placed on the front of the ambulance

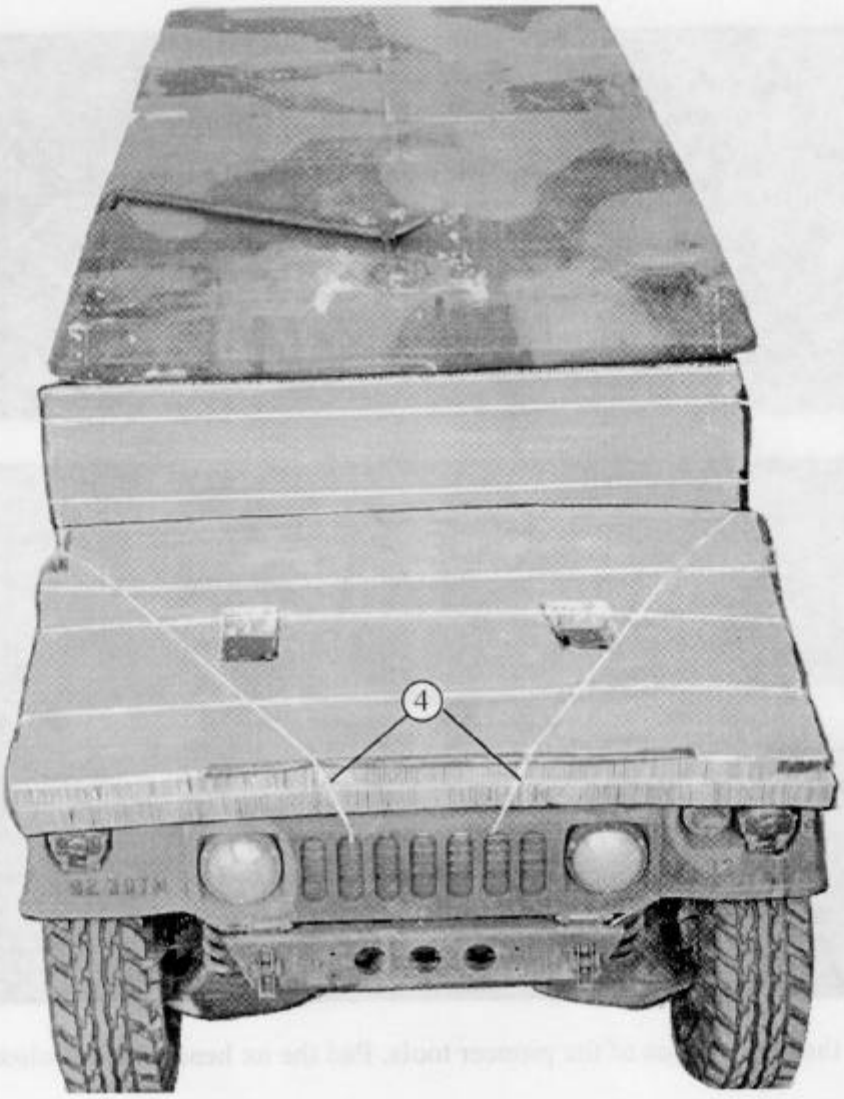

(4) Run a length of type III nylon cord through the grille as shown. Run each free end over the honeycomb placed in steps 2 and 3. Tie the free ends to the mirror supports.

Figure 1-10. Honeycomb placed on the front of the ambulance (continued)

g. Prepare and secure the pioneer tool kit as shown in Figure 1-11.

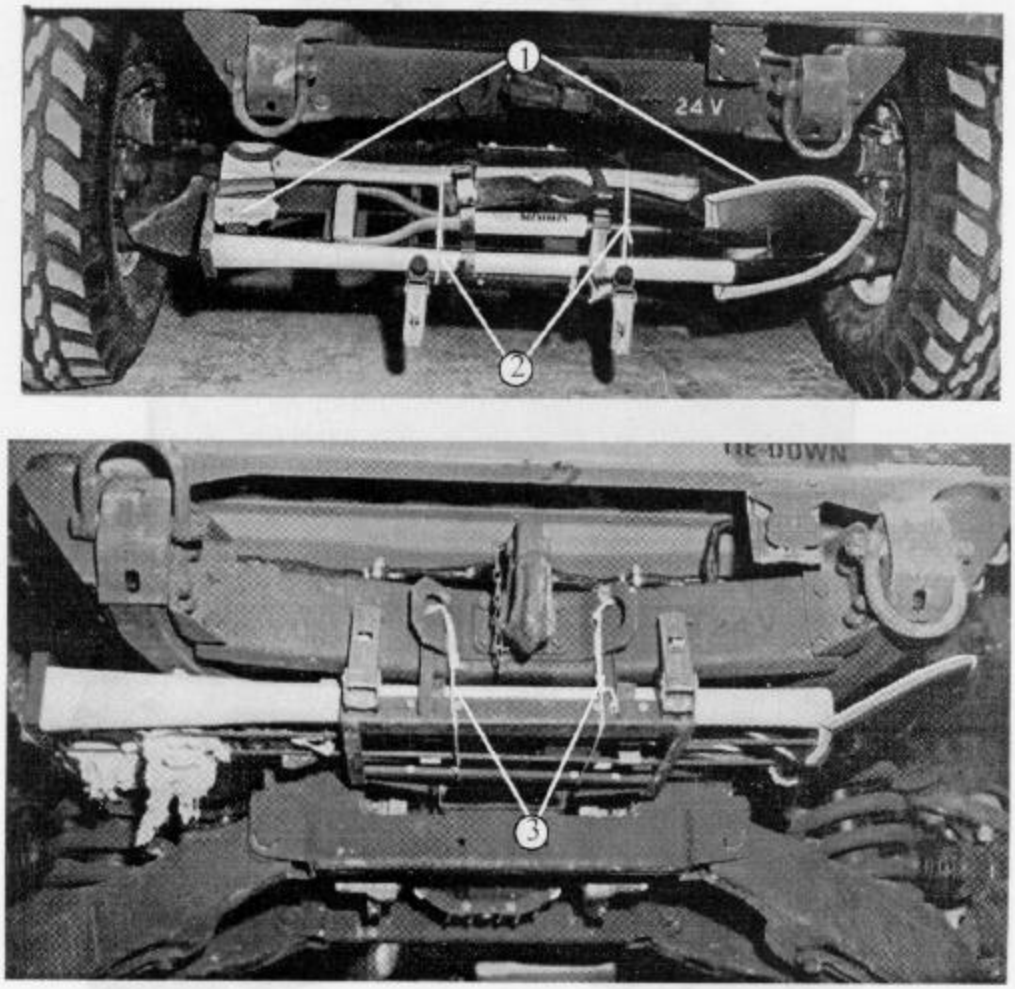

(1) Tape all the sharp edges of the pioneer tools. Pad the ax head with cellulose wadding.

(2) Place the pioneer tools in their rack. Secure the tools with the retainer straps. Tie the tools in place with lengths of type III nylon cord.

(3) Close and latch the tool rack. Tie the rack in place with type III nylon cord.

Figure 1-11. Pioneer tool kit secured

i. Prepare the ambulance body as shown in Figures 1-12 and 1-13.

CAUTION

Lowering the steps at the rear of the ambulance from inside may cause serious injury. Lower the steps from outside the ambulance. Use one hand to activate the release, and control the descent of the step assembly with the other hand.

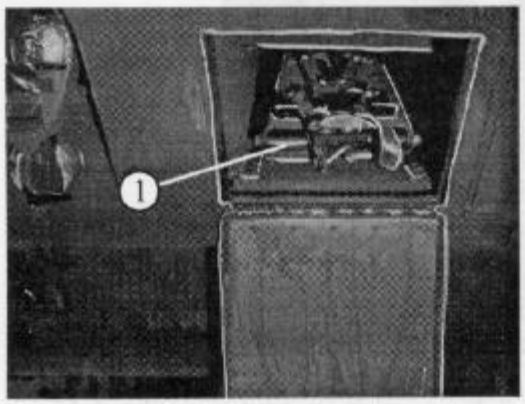

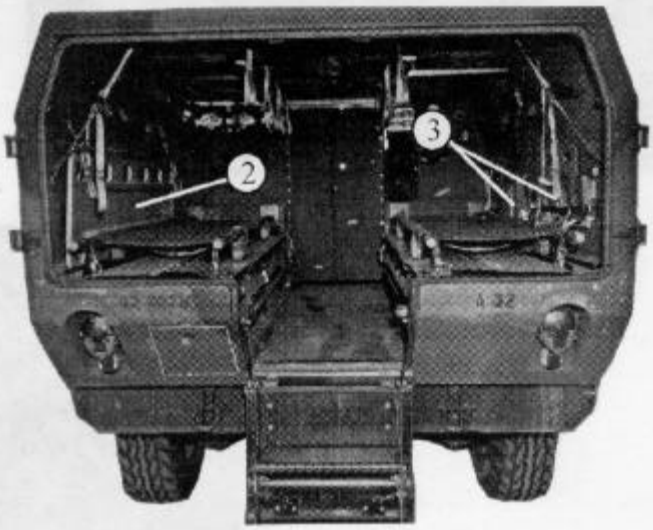

(1) Secure the splints in the access area to the left of the ambulance. Use the straps provided.

(2) Secure the long backboard against the left wall with the straps provided.

(3) Secure the short backboard and the traction splint against the right wall with the straps provided.

Note: Reinforce the straps with type III nylon cord ties where necessary.

Figure 1-12. Medical equipment secured

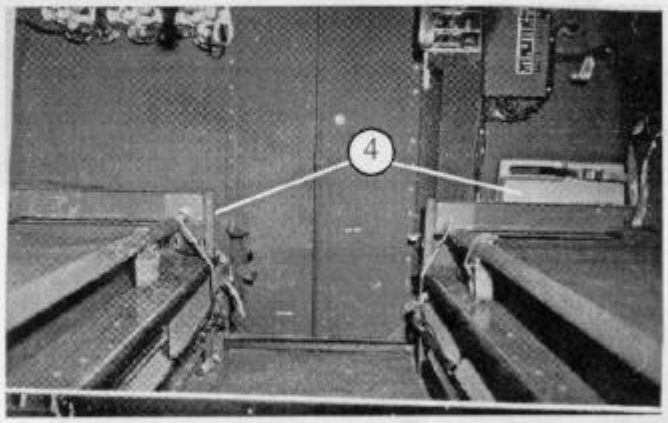

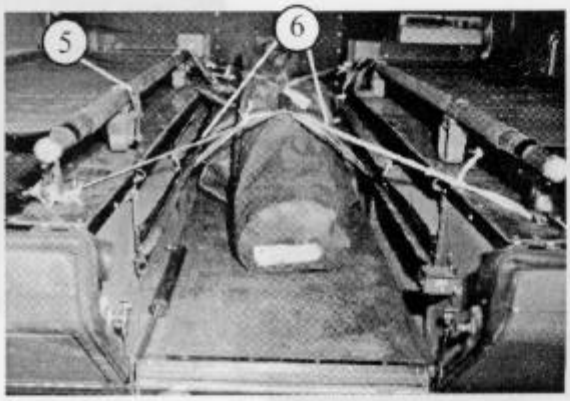

(4) Secure the blanket set in the left front compartment and the resuscitator kit box in the right front compartment. Use the straps provided.

(5) Secure the two litters with the straps provided.

(6) Place the camouflage net and pole bags in the center of the floor. Secure them to the litter tiedown brackets and to the shelf supports with 1/2-inch tubular nylon webbing.

Note: Medical equipment may be different, depending upon the needs of the medical unit. Tie additional equipment, such as water cans, securely to stationary points in the ambulance with 1/2-inch tubular nylon webbing.

Figure 1-12. Medical equipment secured (continued)

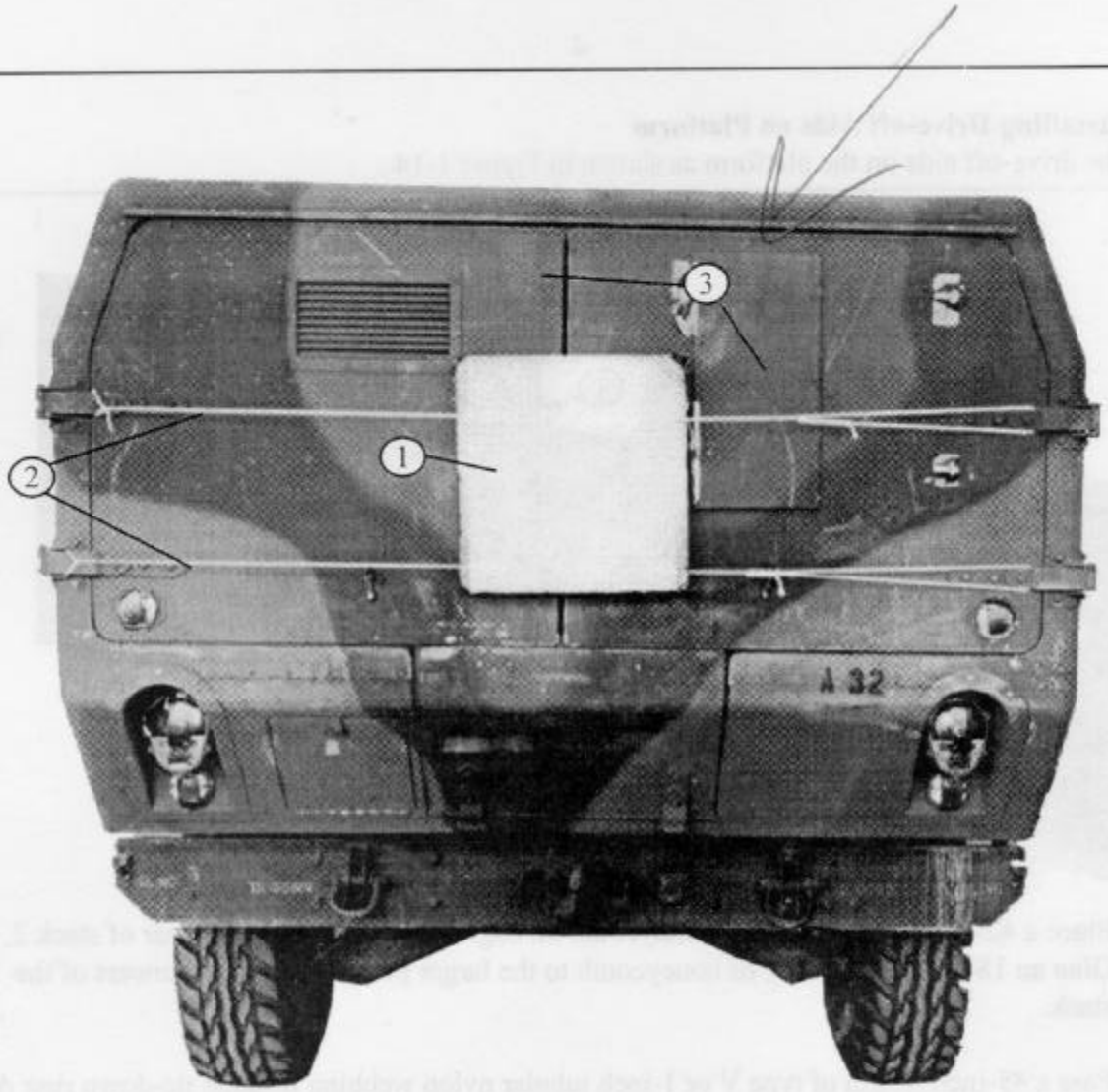

(1) Close and latch the doors. Make an indentation in the center of an 18- by 18-inch piece of honeycomb to fit the door handle.

(2) Secure the honeycomb to the door handle with two lengths of type III nylon cord.

(3) Tape the medical identification panel latches on the rear and sides of the ambulance.

Figure 1-13. Doors secured and latches covered

1-4.1. Installing Drive-off Aids on Platform

Install the drive-off aids on the platform as shown in Figure 1-14.

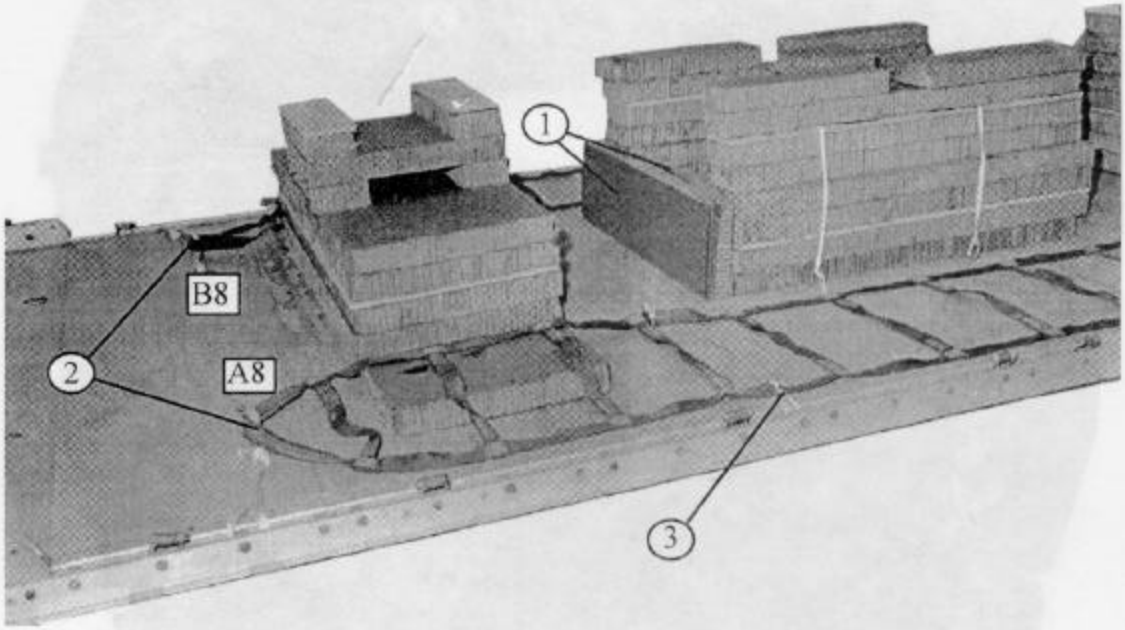

① Place a 42- by 12-inch piece of honeycomb on edge flush with and to the rear of stack 2. Glue an 18- by 6-inch piece of honeycomb to the larger piece between the towers of the stack.

② Pass a 45-inch length of type V or 1-inch tubular nylon webbing through tie-down ring A8, through the end loop of a drive-off aid, and around bushing 30. Knot the webbing according to FM 10-500-2/TO 13C7-1-5. Repeat for the left side, using tie-down ring B8 and bushing 30.

③ Extend the drive-off aids to the front, over stacks 1 and 3. Secure the drive-off aids to clevises and bushings with type I, 1/4-inch cotton webbing.

Figure 1-14. Drive-off aids and honeycomb installed

1-5. Lifting and Positioning Ambulance

Prepare the suspension sling spreader bar provided with the ambulance as shown in Figure 1-15.

Substitute an ACB as a suspension sling spreader only if the spreader bar is not available. Install slings for lifting the ambulance and a suspension sling spreader bar for the rear lifting slings as shown in Figure 1-16. Position the ambulance on the honeycomb stacks as shown in Figure 1-17.

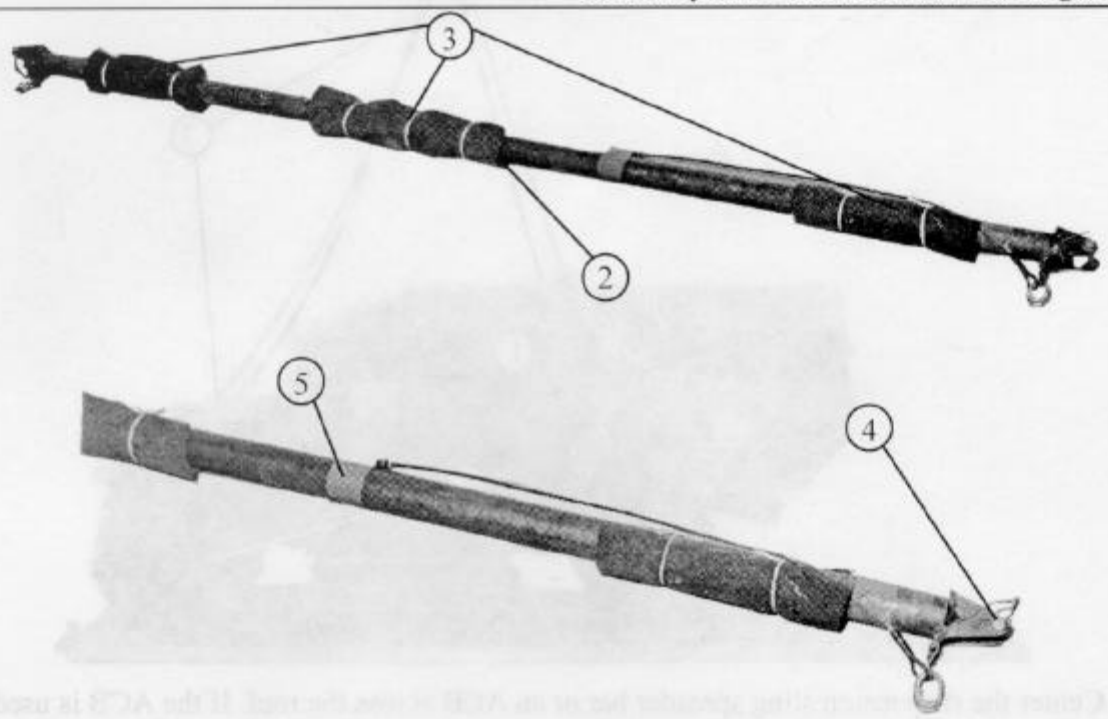

1. Extend the spreader bar to 100 1/2 inches. Position the spreader bar so that the cable split rings face downward.
2. Face the suspension sling brackets downward. Insert the bar extension lock pin 44 1/2 inches from the smaller end of the bar. Tape the pin in place (not shown).
3. Cut three pieces of 7- by 15-inch felt. Place one piece 8 inches from each end of the bar. Place one piece centered on the bar. Secure the felt in place using type III nylon cord.
4. Install the suspension sling retainer pins in each end.
5. Tape the ends of the spreader bar cables to the bar.

Figure 1-15. Spreader bar prepared

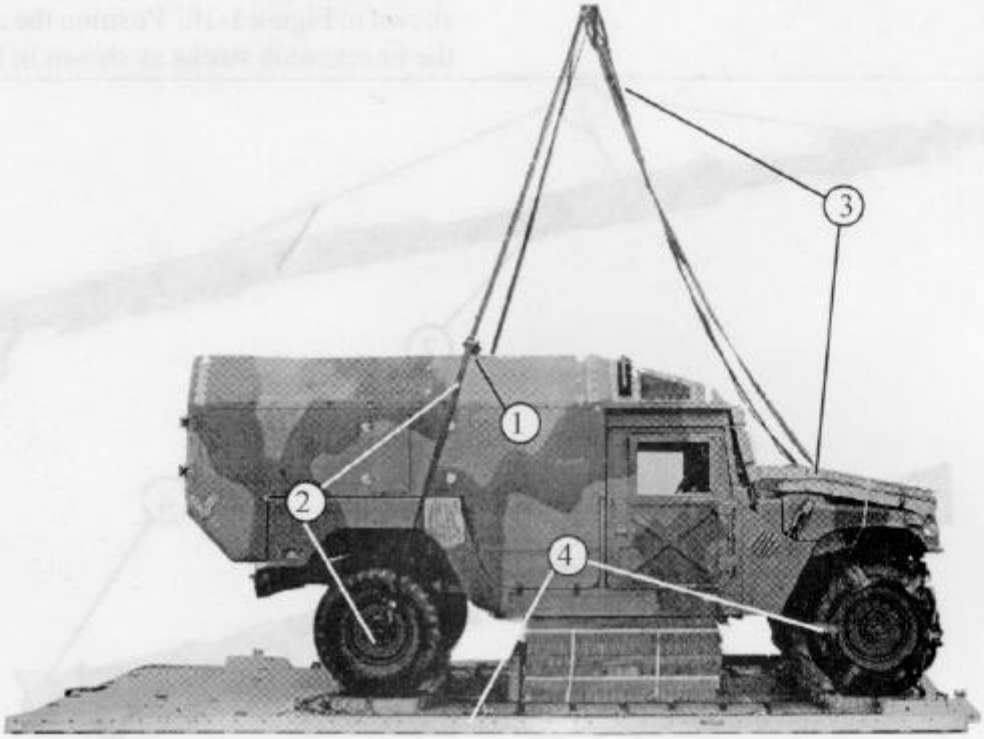

(1) Center the suspension sling spreader bar or an ACB across the roof. If the ACB is used, tie a piece of plywood or felt to the ACB to prevent damage to the roof.

(2) Attach a 16-foot (2-loop), type XXVI nylon webbing sling to each rear wheel shackle. Pass the slings up through the suspension sling brackets on the suspension sling spreader bar or through the square holes of the ACB.

(3) Attach a 12-foot (2-loop), type XXVI nylon webbing sling to each airlift bracket with a large suspension clevis. Pass a 3-foot (2-loop), type XXVI nylon webbing sling through the end loops of both front lifting slings. Place both loops of the 3-foot sling in the crane hook.

(4) Lift the ambulance and suspend it slightly above the honeycomb stacks. Place a drive-off aid under the right front wheel. Holding the drive-off aid against the wheel, turn the wheel counterclockwise until the drive-off aid is under slight tension. Repeat for the other side, but turn the wheel clockwise. Tie the end loop of each drive-off aid to the nearest cross piece with a double length of type I, 1/4-inch cotton webbing.

Figure 1-16. Lifting slings installed, ambulance lifted, and drive-off aids installed

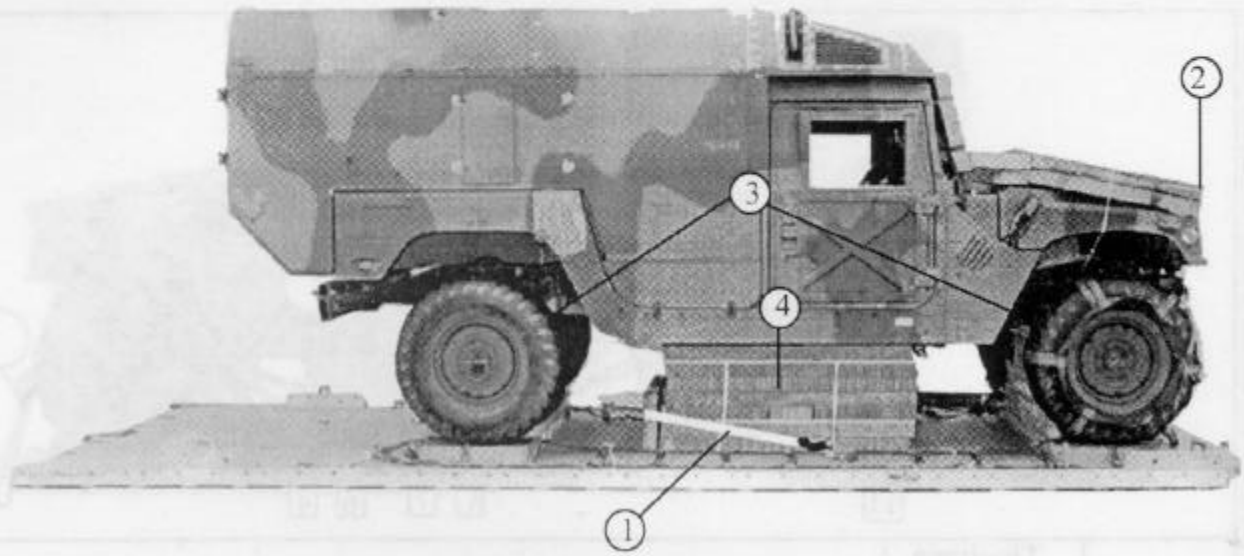

1. Pass a 15-foot lashing through tie-down ring B4 and through its own D-ring. Pass the 15-foot lashing around the rear of stack 2 and against the upright piece of honeycomb. Secure the lashing to tie-down ring A4 with a D-ring and a load binder.
2. Center the ambulance on the platform with the front of the ambulance 2 inches from the front edge of the platform.
3. Make sure that the suspension cross members rest squarely on stacks 1 and 3.
4. Make sure that the frame rails rest squarely on stack 2.
5. Remove the lifting slings and the spreader bar or ACB (not shown).

Figure 1-17. Ambulance positioned and restraint lashing installed on stack 2

1-6. Lashing Ambulance

Lash the ambulance to the platform as shown in Figure 1-18.

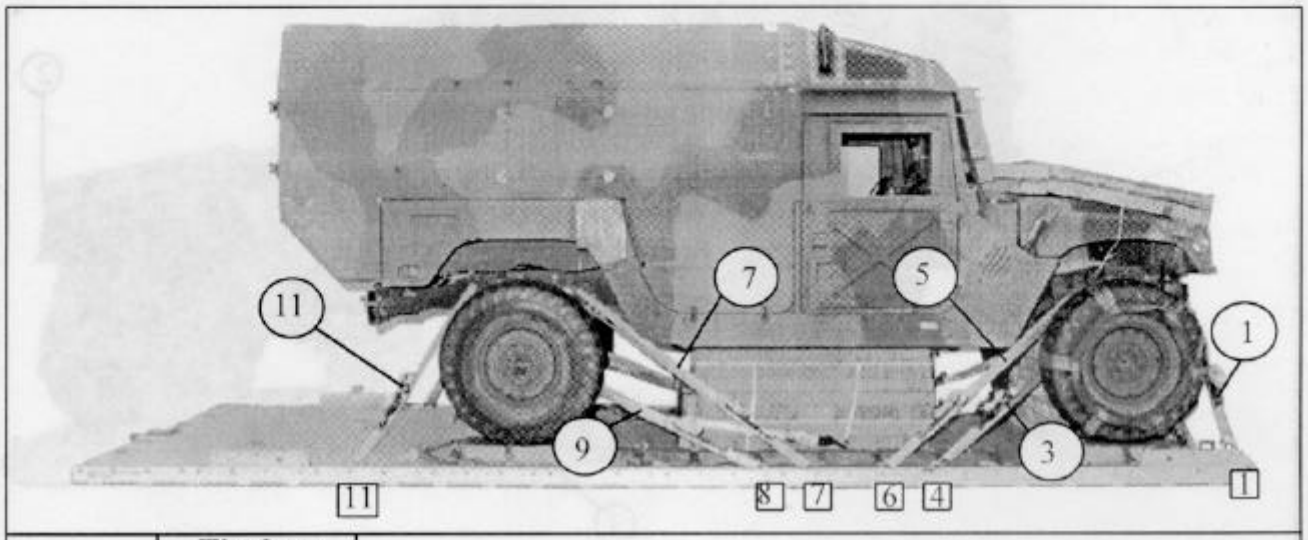

Lashing Number	Tie-down Clevis Number	Instructions
		Pass lashing:
1	1	Through tie-down bracket on end of right frame rail.
2	1A	Through tie-down bracket on end of left frame rail.
3	4	Around right front lower control arm.
4	4A	Around left front lower control arm.
5	6	Through tie-down bracket behind right front coil spring.
6	6A	Through tie-down bracket behind left front coil spring.
7	7	Through tie-down bracket in front of right rear coil spring.
8	7A	Through tie-down bracket in front of left rear coil spring.
9	8	Around right rear lower control arm.
10	8A	Around left rear lower control arm.
11	11	Through tie-down bracket behind right rear coil spring.
12	11A	Through tie-down bracket behind left rear coil spring.

Figure 1-18. Lashings installed

1-7. Installing Suspension System

Install the suspension system as given below.

a. Install the roof covers and ACB supports as shown in Figure 1-19.

b. Install the ACB to the front of the ambulance as shown in Figure 1-20.

Note: Do NOT use the suspension sling spreader bar on the front of the ambulance. Use only the ACB.

c. Lash the front ACB to the platform as shown in Figure 1-21.

d. Install the suspension sling spreader bar to the rear of the ambulance as shown in Figure 1-22. Only if the suspension sling spreader bar is not available, install an ACB to the rear of the ambulance as shown in Figure 1-23. Lash the ACB to the platform as shown in Figure 1-24.

e. Install the suspension slings and deadman's tie for a suspension system using the spreader bar as shown in Figure 1-25.

f. Install the suspension slings and the deadman's tie for a suspension system using the ACB as shown in Figure 1-25.1.

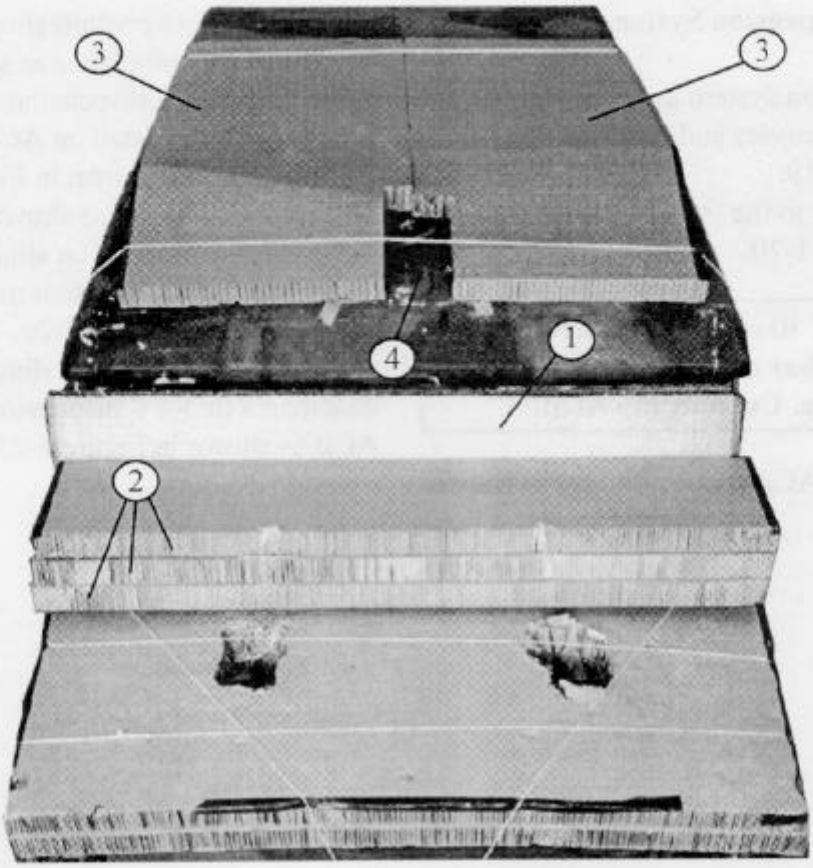

(1) Place a 16- by 82-inch piece of honeycomb over the piece of honeycomb covering the windshield. Tie the honeycomb in place with a length of type III nylon cord.

(2) Stack three 18- by 82-inch pieces of honeycomb against the piece of honeycomb installed in step 1 above.

(3) Cover the front of the roof with two 36- by 96-inch pieces of honeycomb, with the front edge of the honeycomb 6 inches from the front edge of the roof.

Note: Tape the edges of the honeycomb where the type III nylon cord passes over it.

(4) Make a 10- by 20-inch cutout in the honeycomb as shown to allow for the fixtures on the roof. Tie the honeycomb to convenient points on the load with type III nylon cord.

Figure 1-19. Roof cover and ACB supports installed

This drawing is not drawn to scale.

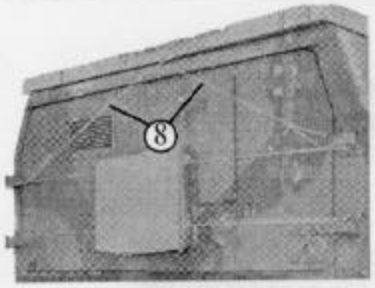

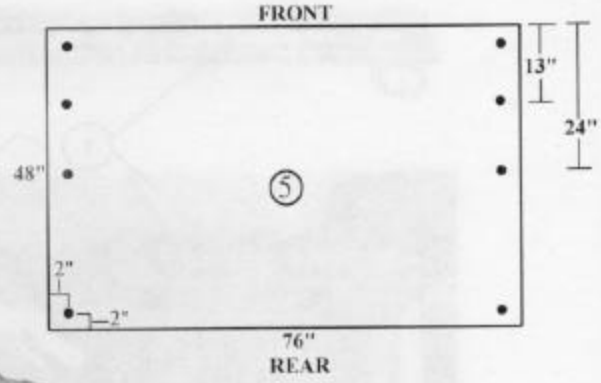

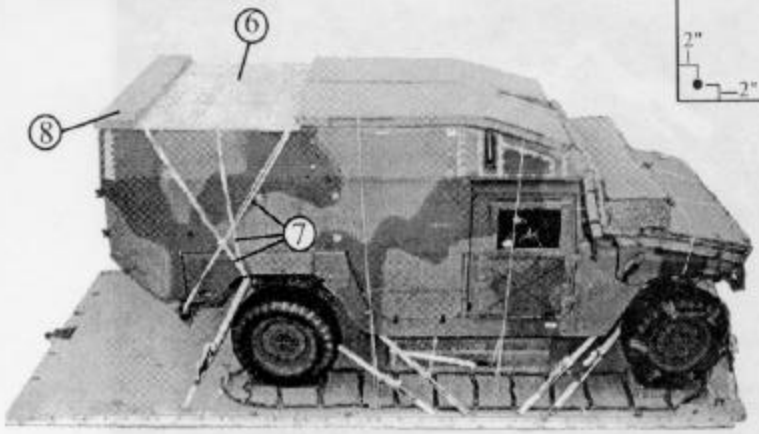

(5) Drill eight 1/2-inch holes in a 3/4- by 48- by 76-inch piece of plywood as shown.

Note: If the ACB is used instead of the spreader bar, run an 18-inch length of 1/2-inch tubular nylon webbing through each of the second and third holes.

(6) Cover the rear of the ambulance roof with the plywood so that the front edge of the plywood is flush with the honeycomb and the rear edge is 12 inches from the rear edge of the roof.

(7) Secure the plywood to the roof with 1/2-inch tubular nylon webbing as follows: from the front holes in the plywood to the rear bumpers, from the rear holes to the tie-down brackets in front of the rear coil springs, and from the center holes to the tie-down brackets behind the rear coil springs.

(8) Place a 76- by 12-inch piece of honeycomb across the roof against the rear edge of the plywood. Tie the honeycomb to the upper door hinges and to the rear holes in the plywood with type III nylon cord.

Figure 1-19. Roof cover and ACB supports installed (continued)

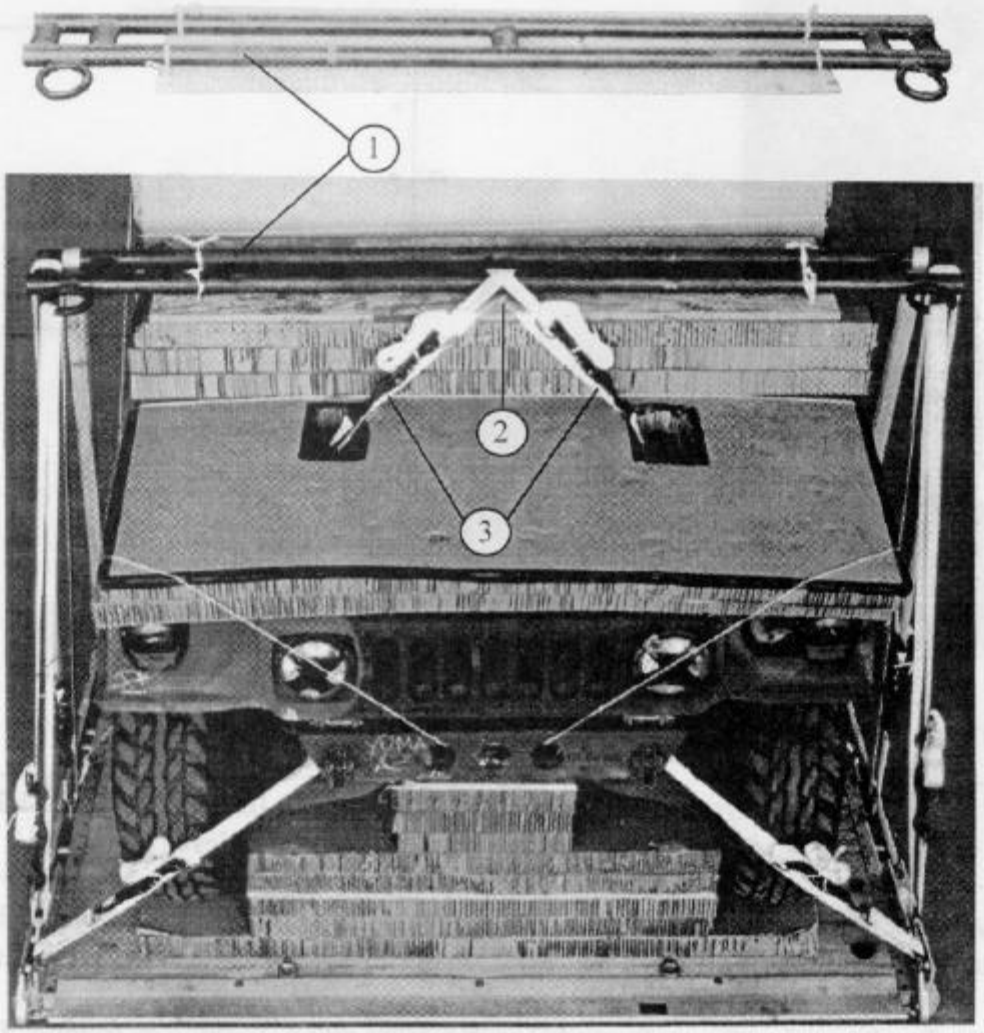

(1) Drill a 1/2-inch hole one inch from each corner of a 3/4- by 15- by 76-inch piece of plywood. Tie an ACB to the plywood with 1/2-inch tubular nylon webbing.

(2) Center the ACB and plywood on the honeycomb stack on the front of the ambulance with the rings facing the front.

(3) Run a 15-foot lashing from each airlift bracket around the center bar of the ACB.

Figure 1-20. Front ACB installed

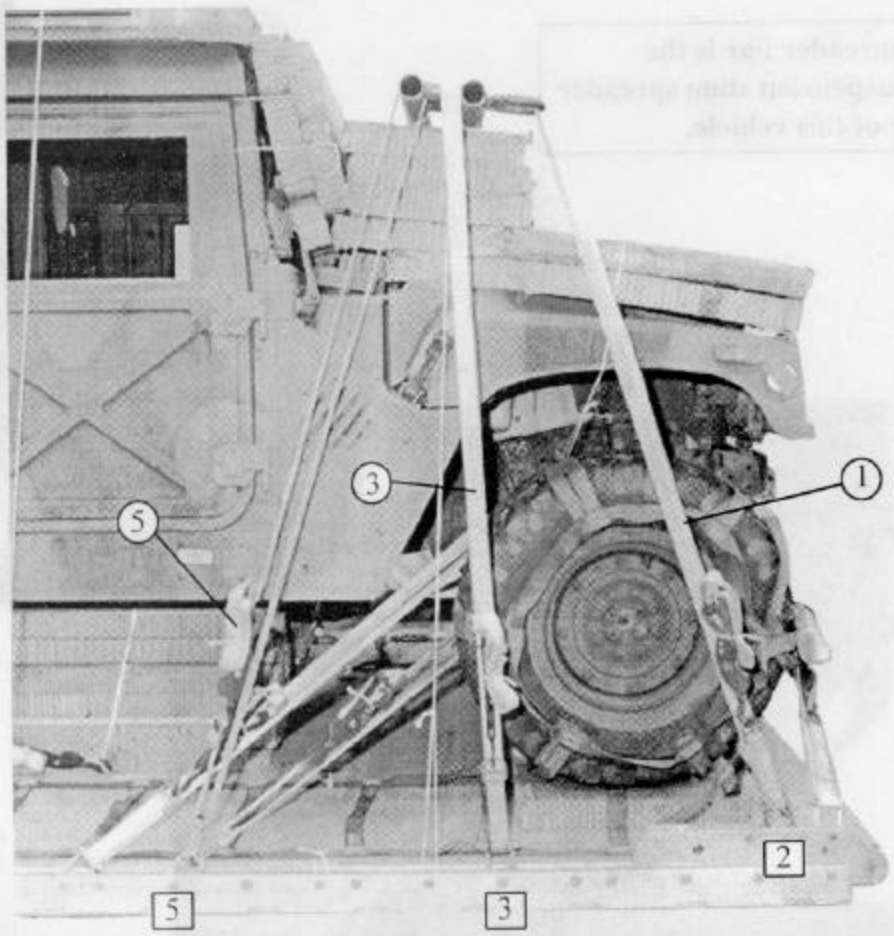

Lashing Number	Tie-down Clevis Number	Instructions
		Pass lashing:
1	2	Through ring of ACB.
2	2A	Through ring of ACB.
3	3	Through square hole of ACB.
4	3A	Through square hole of ACB.
5	5A	Around rear bar of ACB.
6	5A	Around rear bar of ACB.

Figure 1-21. Front ACB lashed to platform

Note: The spreader bar is the preferred suspension sling spreader for the rear of this vehicle.

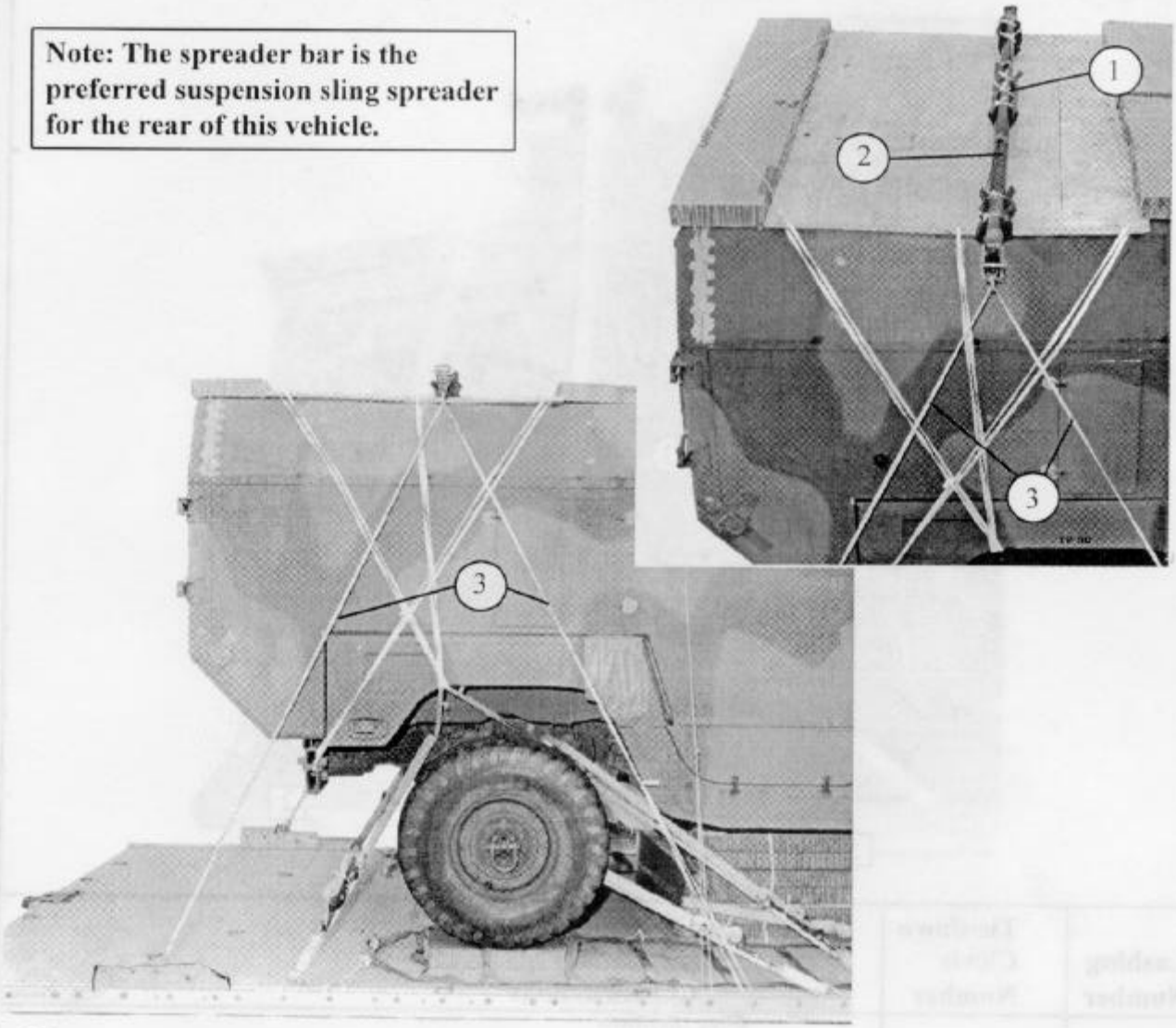

(1) Prepare the suspension sling spreader bar as shown in Figure 1-15.

(2) Center the spreader bar across the plywood and 41 1/2 inches from the rear edge of the roof.

(3) Tie a length of 1/2-inch tubular nylon webbing to clevises 12 and 12A. Pass the webbing up through the cable rings on the spreader bar and down to bushing 19 on each side of the platform.

Figure 1-22. Suspension sling spreader bar installed

Notes: 1. This is an alternative method to be used only when the spreader bar is not available.
2. Be sure the ACB is centered to prevent damage to the aircraft.

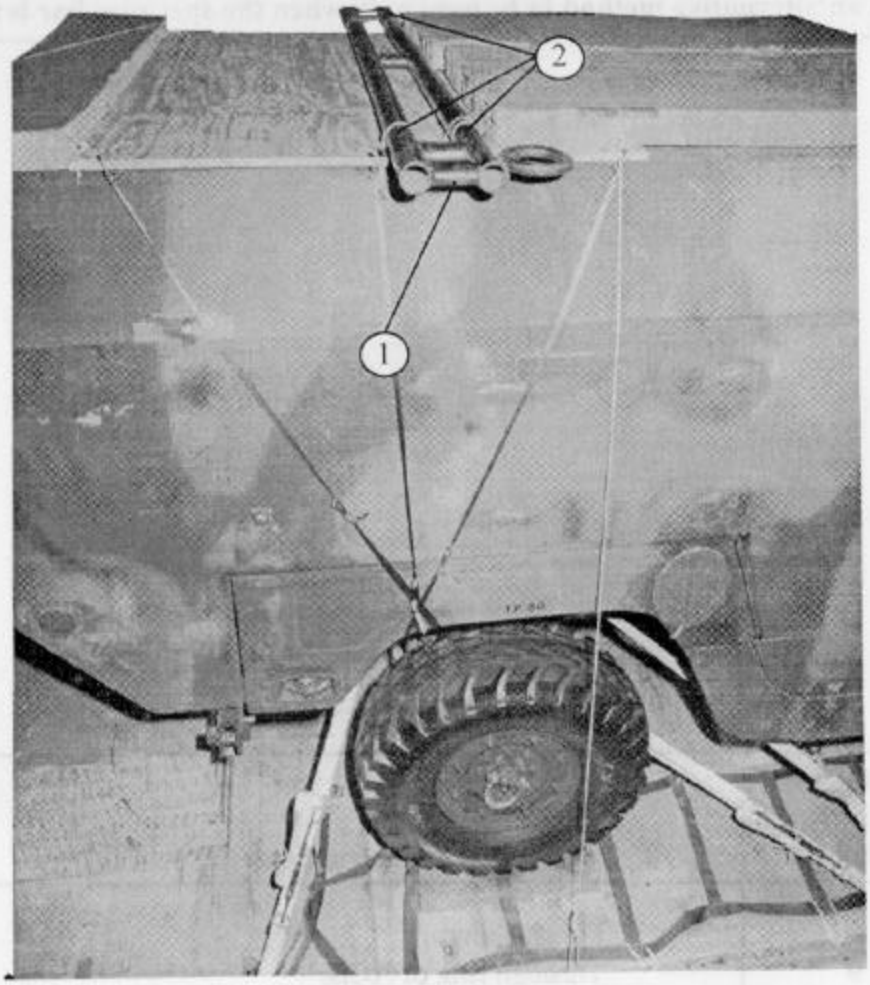

(1) Center the ACB at the front of the plywood roof cover between the second and third holes. Face the rings to the front.

(2) Tie the ACB in place with the ties positioned in step 5 of Figure 1-19.

Figure 1-23. Rear ACB installed as alternative to spreader bar

CAUTION
Ensure that the lashings are not so tight that they cause the ambulance roof to buckle.

Note: This is an alternative method to be used only when the spreader bar is not available.

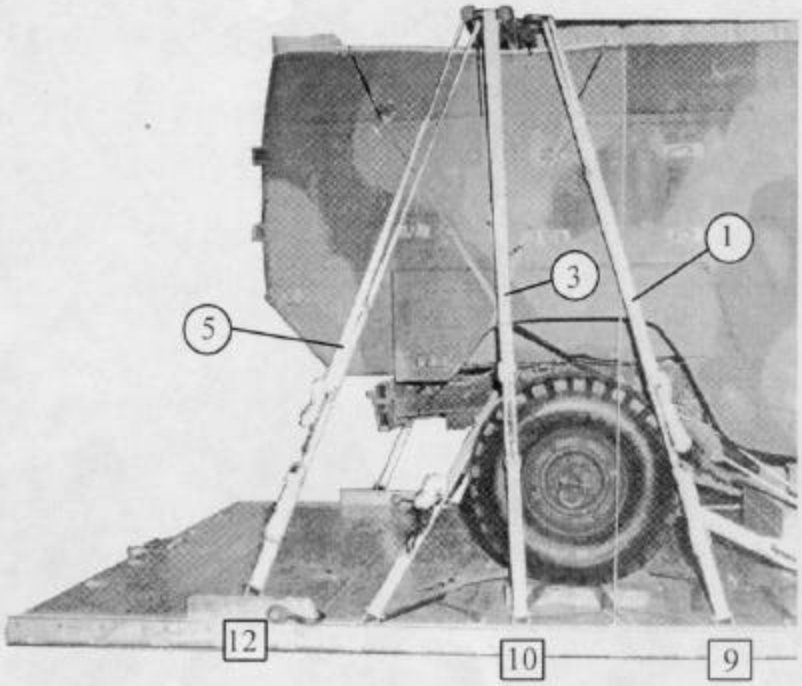

Lashing Number	Tie-down Clevis Number	Instructions
		Pass lashing:
1*	9	Through ring of ACB.
2*	9A	Through ring of ACB.
3	10	Through square hole of ACB.
4	10A	Through square hole of ACB.
5*	12	Around rear bar of ACB.
6*	12A	Around rear bar of ACB.

* 30-foot lashing

Figure 1-24. Rear ACB lashed to platform as alternative to spreader bar

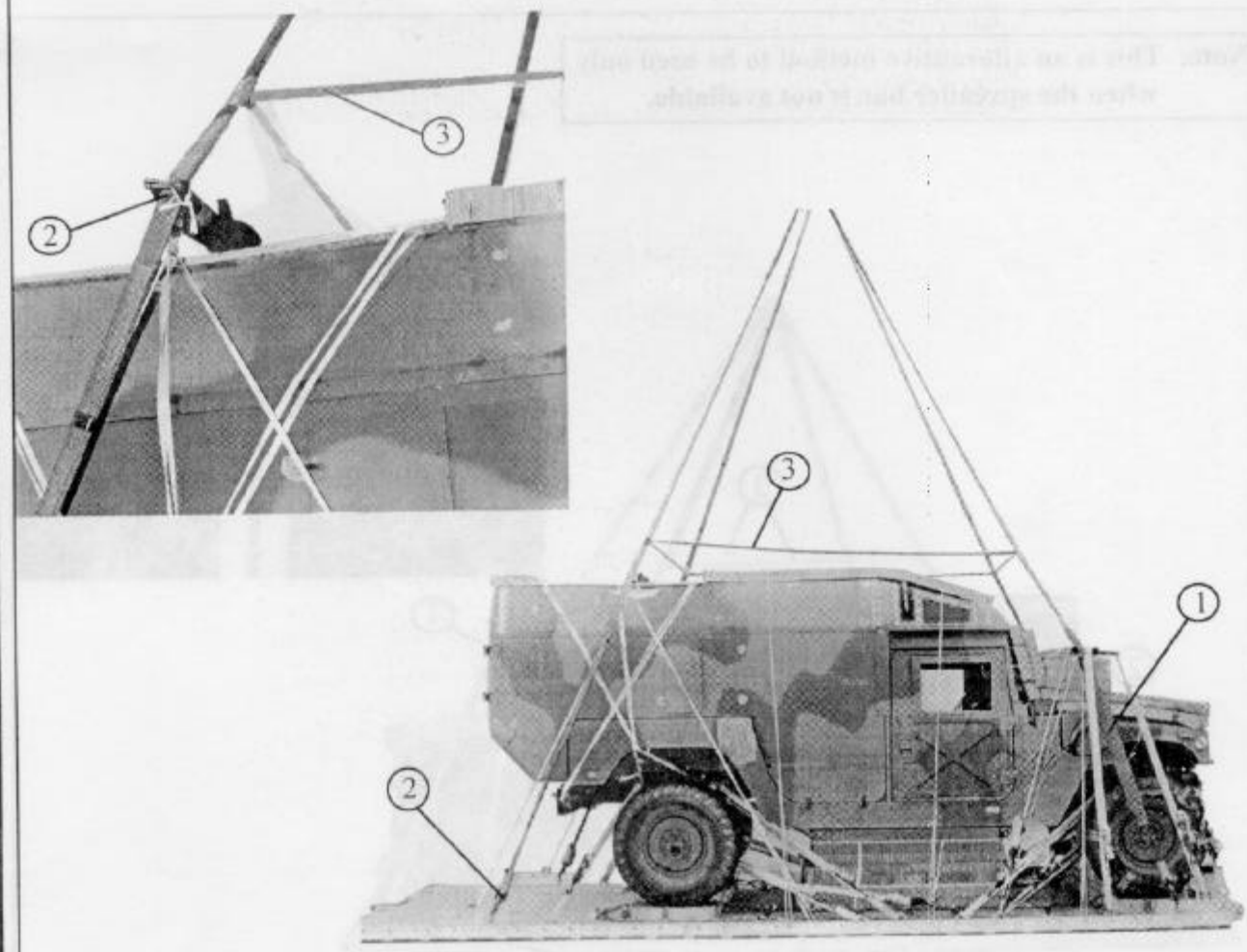

(1) Attach a 20-foot (2-loop), type XXVI nylon webbing sling to each front tandem link with a large clevis. Install a suspension sling sleeve to protect the slings where they contact the truck fender and the ACB. Extend the slings upward through the square holes in the ACB, and safety the slings to the ACB with type I, 1/4-inch cotton webbing.

(2) Attach a 20-foot (2-loop), type XXVI nylon webbing sling to each rear suspension link with a large clevis. Run the rear suspension slings up through the suspension sling brackets in the spreader bar. Safety the rear slings to the spreader bar with type I, 1/4-inch cotton webbing.

(3) Install the deadman's tie according to FM 10-500-2/TO 13C7-1-5.

Figure 1-25. Suspension slings and deadman's tie installed with spreader bar

Note: This is an alternative method to be used only when the spreader bar is not available.

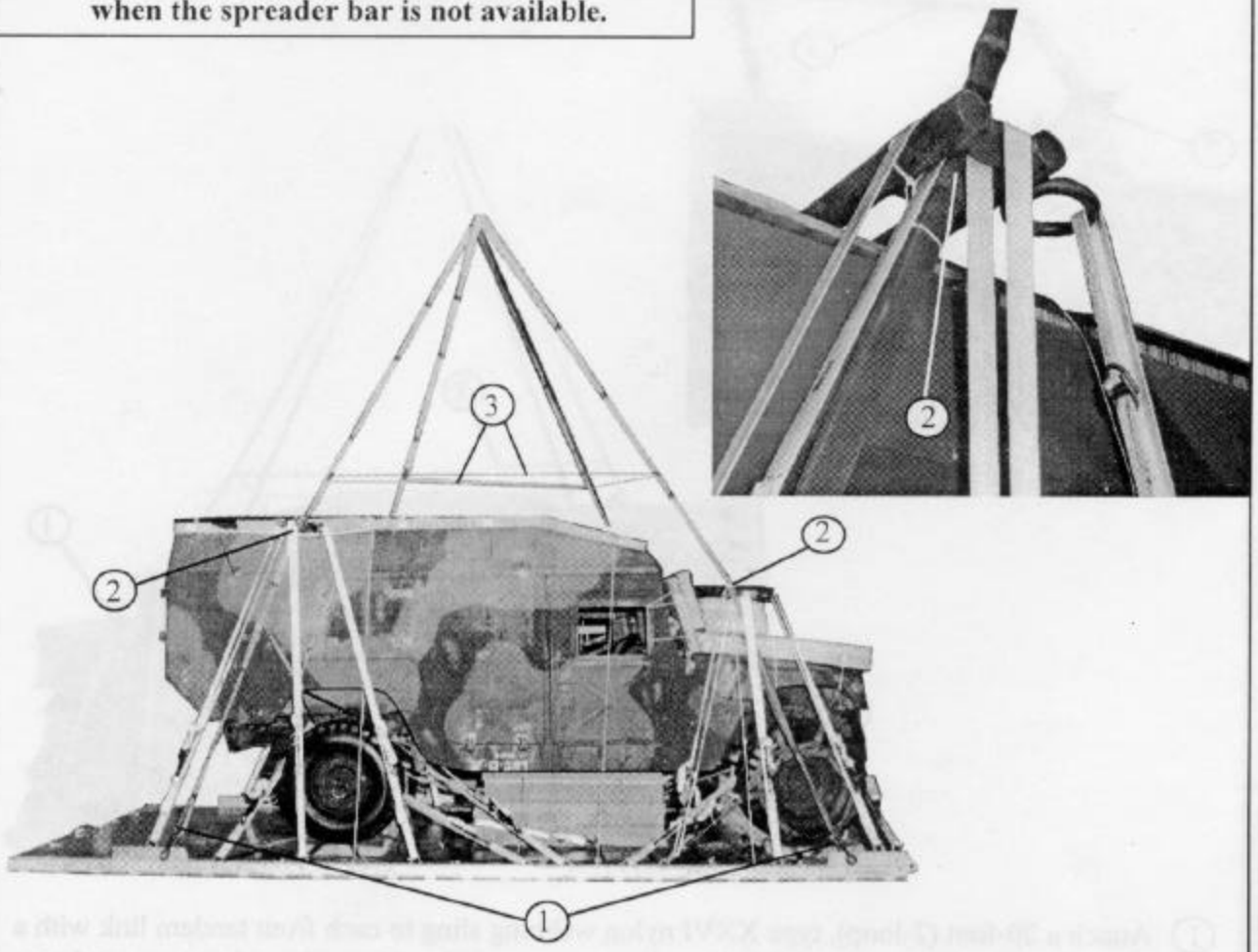

(1) Use a large clevis to attach a 20-foot (2-loop), type XXVI nylon webbing sling to each suspension link at the rear of the load and to each tandem link at the front.

(2) Extend the suspension slings up through the square holes in the ACB's. Pull the slings taut. Safety the slings to the ACB's with type III nylon cord.

(3) Install the deadman's tie according to FM 10-500-2/TO 13C7-1-5.

Figure 1-25.1. Suspension slings and deadman's tie installed with ACB

1-8. Stowing Cargo Parachutes

Prepare and install the parachute stowage platform as shown in Figure 1-26. Stow two G-11 cargo parachutes on the load as shown in Figure 1-27.

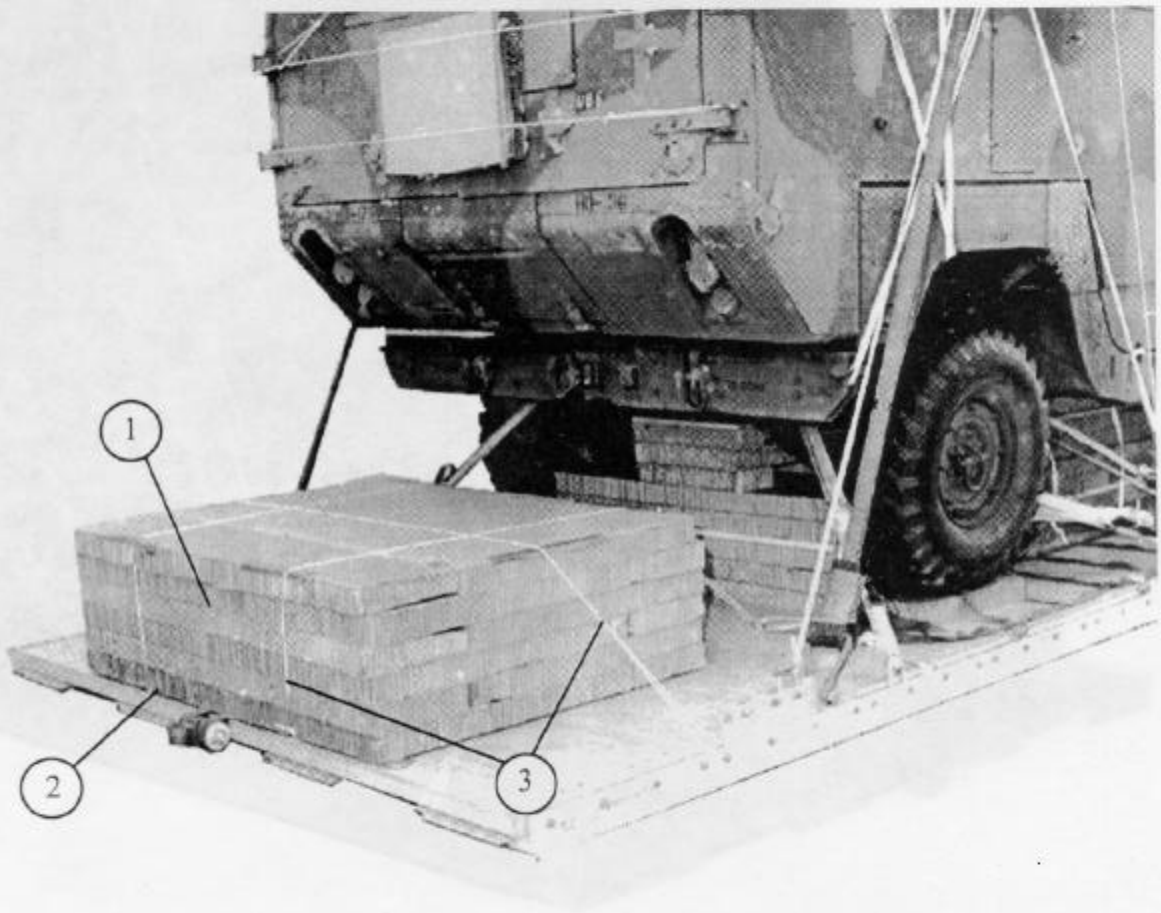

① Alternate six pieces of honeycomb 60- by 36 inches and six pieces 60- by 12 inches to make a six-layer stack 60 inches wide and 48 inches long. Glue the layers together.

② Center a 60-inch edge flush with the rear edge of the platform.

③ Secure the stack to the platform with type III nylon cord tied to convenient tie-down rings or to clevises.

Figure 1-26. Parachute stowage platform prepared and installed

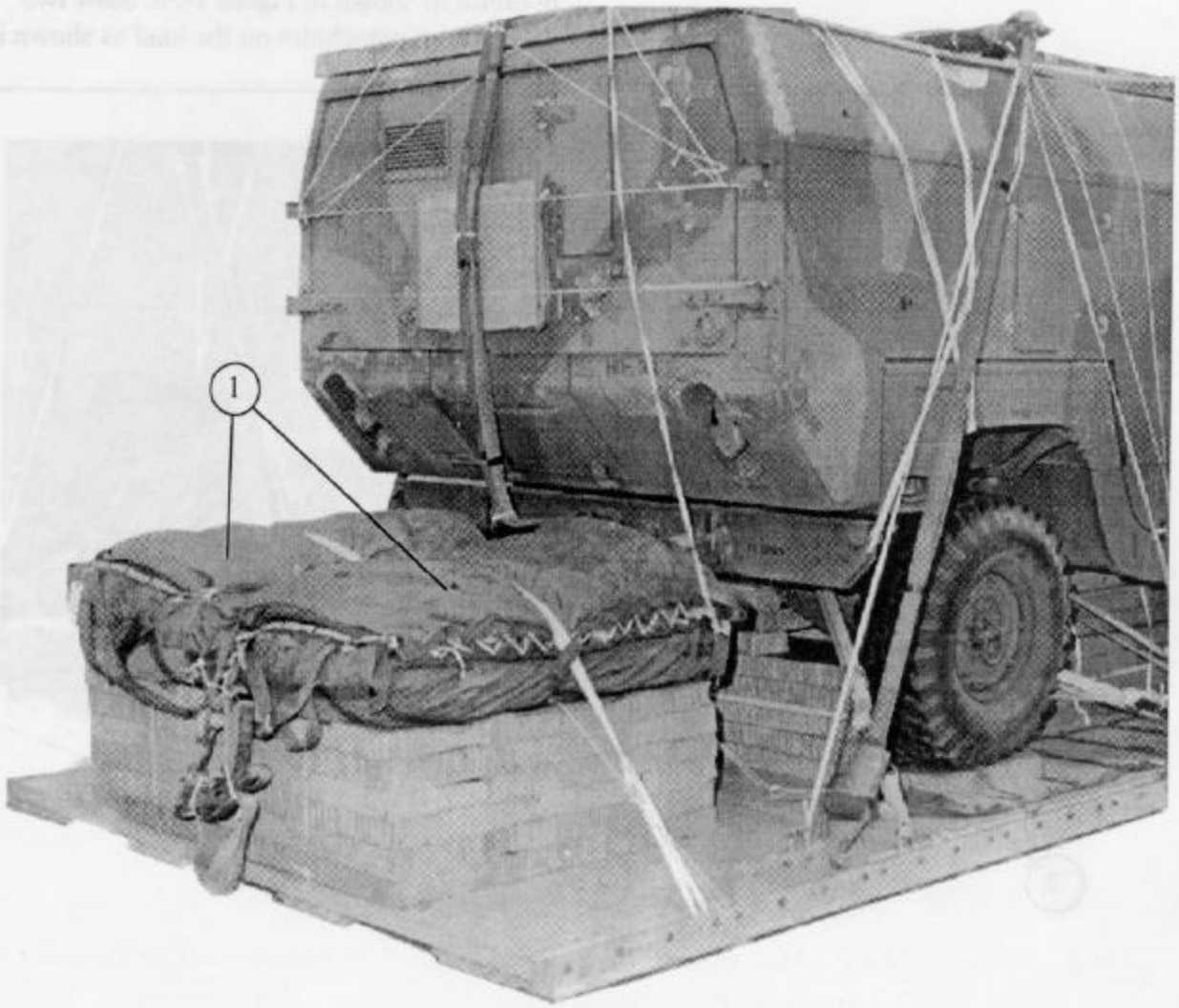

(1) Install two G-11 cargo parachutes according to FM 10-500-2/TO 13C7-1-5. Restrain the parachutes to bushing 37.

Figure 1-27. Parachutes installed

1-9. Installing EFTC System

Install the EFTC extraction system according to FM 10-500-2/TO 13C7-1-5 and as shown in Figure 1-28.

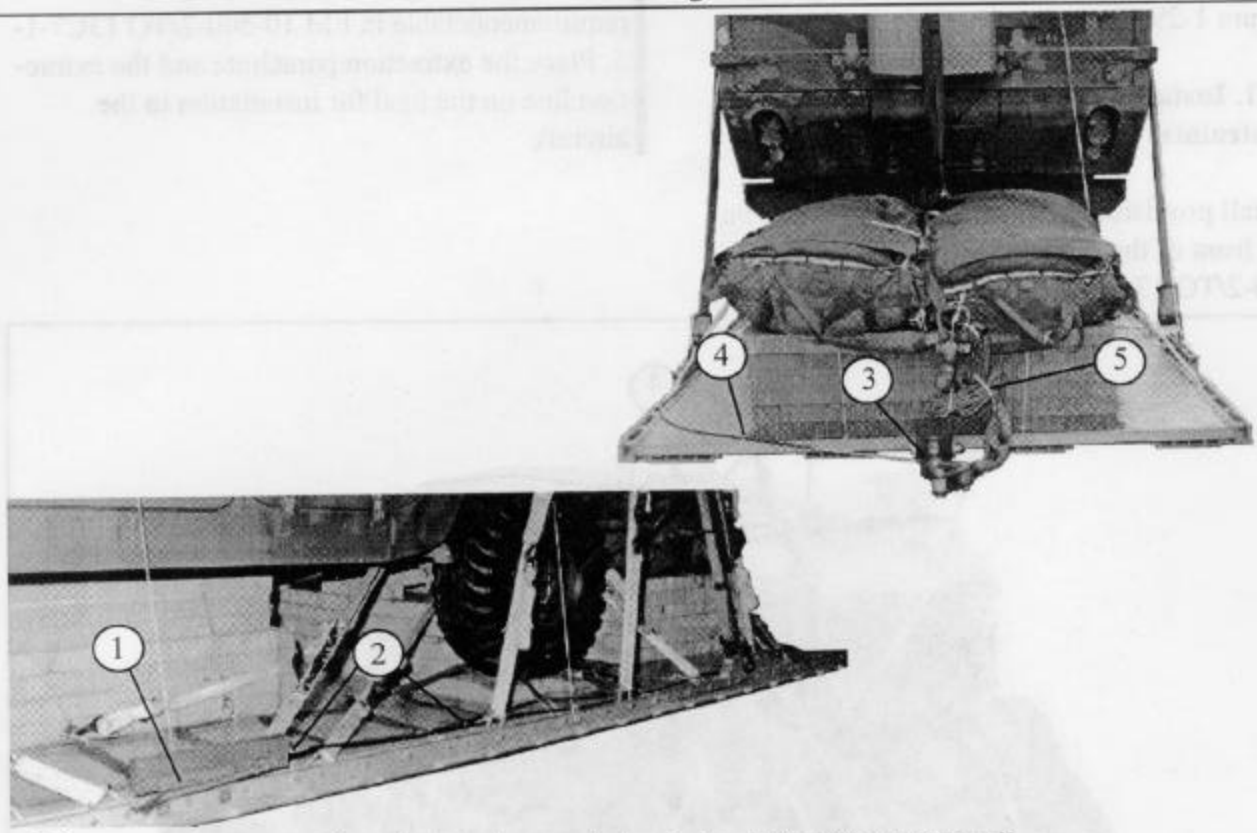

1. Install the actuator brackets to the rear holes in the left platform side rail.
2. Install the actuator and a 16-foot cable. Tie the cable to convenient points inside the lashings with type I, 1/4-inch cotton webbing.
3. Install the latch assembly and attach the cable.
4. Tie the cable to the left rear tie-down ring the type I, 1/4-inch cotton webbing.
5. Install a 9-foot (2-loop), type XXVI nylon webbing sling as a deployment line.

Figure 1-28. EFTC installed

1-10. Installing Parachute Release

Install an M-1 cargo parachute release according to FM 10-500-2/TO 13C7-1-5 and as shown in Figure 1-29.

1-11. Installing Provisions for Emergency Restraints

Install provisions for emergency restraints on the front of the platform according to FM 10-500-2/TO 13C7-1-5.

1-12. Placing Extraction Parachute

Select the extraction parachute and extraction line needed using the extraction line requirements table in FM 10-500-2/TO 13C7-1-5. Place the extraction parachute and the extraction line on the load for installation in the aircraft.

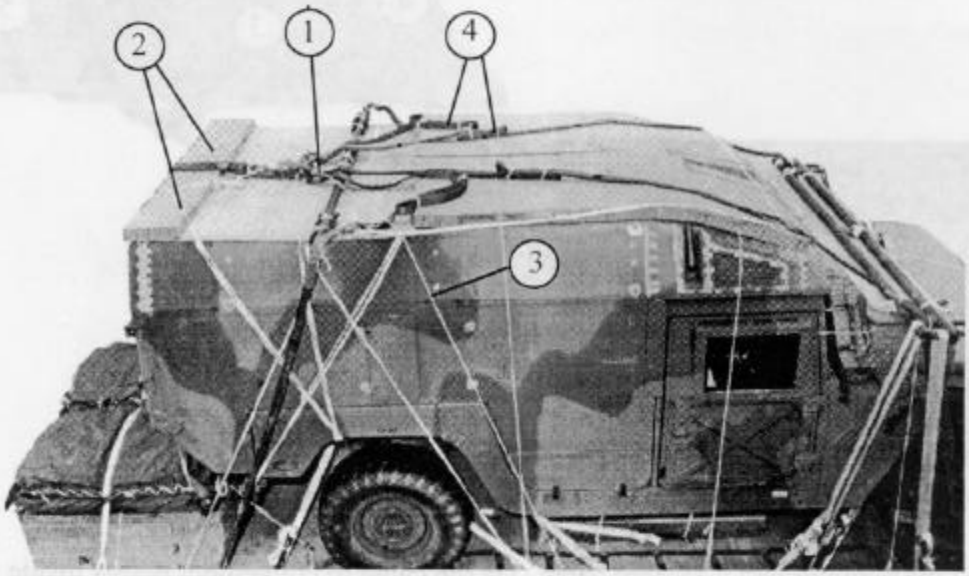

(1) Center the release on the roof of the ambulance as shown. Connect the suspension slings and the riser extensions according to FM 10-500-2/TO 13C7-1-5.

(2) Safety tie the connector links to the door hinges with type III nylon cord.

(3) Safety tie the bottom of the release to the platform rails with type III nylon cord.

(4) S-fold and tie any slack in the suspension slings with type I, 1/4-inch cotton webbing.

Figure 1-29. M-1 release installed

1-13. Marking Rigged Load

Mark the rigged load according to FM 10-500-2/TO 13C7-1-5 and as shown in Figure 1-30. Complete Shipper's Declaration for Dangerous Goods. If the load varies from the one shown, the weight, height, CB and parachute requirements must be recomputed.

1-14. Equipment Required

Use the equipment listed in Table 1-2 to rig this load.

CAUTION
Make the final rigger inspection required by FM 10-500-2/TO 13C7-1-5 before the load leaves the rigging site.

Note: Secure the ambulance to the carrier when transporting this load from the rigging site to the departure airfield.

RIGGED LOAD DATA

Weight: Load shown*	10,420 pounds
Maximum load allowed	10,500 pounds
Height	100 inches
Width	108 inches
Length	263 inches
Overhang: Front	5 1/2 inches
Rear	19 inches
CB (from front edge of platform)	108 inches

*This load includes camouflage net and poles weighing 65 pounds.

Figure 1-30. M996, 2-litter armored ambulance (HMMWV) rigged on a type V platform for low-velocity airdrop

Table 1-2. Equipment required for rigging the M996, 2-litter armored ambulance (HMMWV) on a type V platform for low-velocity airdrop

National Stock Number	Item	Quantity
8040-00-273-8713	Adhesive, paste, 1-gal	As required
1670-00-003-4389	Bar, attitude control	2
	Clevis, suspension:	
4030-00-678-8562	3/4-in (medium)	2
4030-00-090-5354	1-in (large)	5
4020-00-240-2146	Cord, nylon, type III, 550-lb	As required
1670-00-434-5785	Coupling, airdrop, extraction force transfer w 16-ft cable	1
8135-00-664-6958	Cushioning material, packaging, cellulose wadding	As required
8305-00-958-3685	Felt, 1/2-in thick	As required
1670-01-183-2678	Leaf, extraction line	2
	Line, extraction:	
1670-01-062-6313	60-ft (3-loop), type XXVI nylon webbing	1
1670-01-107-7651	140-ft (3-loop), type XXVI nylon webbing	1
	Link assembly:	
	Two-point:	1
5306-00-435-8994	Bolt, 1-in diam, 4-in long	(2)
5310-00-232-5165	Nut, 1-in	(2)
1670-00-003-1953	Plate, side, 3 3/4-in	(2)
5365-00-007-3414	Spacer, large	(2)
1670-00-783-5988	Type IV	3
5510-00-220-6448	Lumber, 2- by 6- 16-in	1
1670-00-753-3928	Pad, energy-dissipating, honeycomb, 3- by 36- by 96-in:	21 sheets
	Parachute:	
	Cargo:	
1670-01-016-7841	G-11B	2
	Cargo extraction:	
1670-00-687-5458	22-ft	1

Table 1-2. Equipment required for rigging the M996, 2-litter armored ambulance (HMMWV) on a type V platform for low-velocity airdrop (continued)

National Stock Number	Item	Quantity
	Platform, AD, type V, 20-ft:	
	Bracket:	
1670-01-162-2375	Inside EFTA	(1)
1670-01-162-2374	Outside EFTA	(1)
1670-01-162-2372	Clevis assembly	(26)
1670-01-162-2376	Extraction bracket assembly	(1)
1670-01-247-2389	Suspension link	(2)
1670-01-162-2381	Tandem link	(2)
5530-00-128-4981	Plywood, 3/4-in:	
	8- by 54-in	2
	10- by 10-in	2
	12- by 54-in	2
	15- by 76-in	1
	20- by 6-in	4
	48- by 76-in	1
	54- by 24-in	2
1670-01-097-8816	Release, cargo parachute, M-1	1
	Sling, cargo airdrop:	
	For deployment line:	
1670-01-062-6304	9-ft (2-loop), type XXVI nylon webbing	1
	For lifting:	
1670-01-062-6303	12-ft (2-loop), type XXVI nylon webbing	2
1670-01-063-7761	16-ft (2-loop), type XXVI nylon webbing	2
1670-01-062-6301	3-ft (2-loop), type XXVI nylon webbing	1
	For riser extension:	
1670-01-062-6302	20-ft (2-loop), type XXVI nylon webbing	2
	For suspension:	
1670-01-062-6302	20-ft (2-loop), type XXVI nylon webbing	4

Table 1-2. Equipment required for rigging the M996, 2-litter armored ambulance (HMMWV) on a type V platform for low-velocity airdrop (continued)

National Stock Number	Item	Quantity
1670-00-040-8219	Strap, parachute release w fastener and release knife	2
	Tape, adhesive:	
7510-00-266-5016	2-in	As required
8125-00-074-5124	Cloth-backed, type IV, 2-in	As required
1670-00-937-0271	Tiedown assembly, 15-ft	23
1670-00-431-8486	Vehicle drive-off aids	1
	Webbing:	
8305-00-268-2411	Cotton, 1/4-inch, type I	As required
	Nylon:	
	Tubular:	
8305-00-082-5752	1/2-in or	As required
8305-00-268-2453	1/2-in	As required
8305-00-263-3591	Type VIII	As required

Section II

LAPE AIRDROP

1-15. Description of Load

The unrigged M996 ambulance is described in Section I. The ambulance is rigged on a 24-foot, type V platform for LAPE airdrop. An accompanying load weighing a minimum of 1,500 pounds and a maximum of 2,700 pounds must be rigged on the load.

1-16. Preparing Platform

Prepare a 24-foot, type V platform using two tandem links and 42 clevis assemblies as shown in Figure 1-31.

Note: Measurements given in this section are from the front edge of the platform, NOT from the front edge of the nose bumper.

REFERENCES

AFR 55-40/AR 59-4	*Joint Airdrop Inspection Records, Malfunction Investigations and Activity Reporting.* 27 November 1984.
***AFJMAN 24-204/TM 38-250**	*Preparing Hazardous Materials for Military Air Shipments.* 25 November 1994.
FM 10-500-2/TO 13C7-1-5	*Airdrop of Supplies and Equipment: Rigging Airdrop Platforms.* 1 November 1990.
****FM 10-500-53/MCRP 4-3.8/ TO 13C7-18-41**	*Airdrop of Supplies and Equipment: Rigging Ammunition.* 1 March 1996.
TM 9-2320-280-10/TO 36A 12-1A-2091-1/TM 2320-10/6	*Operator's Manual for Truck, 1 1/4-ton* April 1985.
TM 10-1670-268-20&P/ TO 13C7-52-22	*Organizational Maintenance Manual With Repair Parts and Special Tools List: Type V Airdrop Platform.* 1 June 1986.
TM 10-1670-277-23&P/ TO 13C5-28-2/NAVAIR 13-1-30	*Unit and Intermediate DS Maintenance Manual Including Repair Parts and Special Tools List for Parachute, 28-foot Diam, Extraction.* 9 October 1990.
TM 10-1670-278-23&P/ TO 13C5-26-2/NAVAIR 13-1-27/ TM 01109C-23&P/1	*Unit and Intermediate DS Maintenance Manual Including Repair Parts and Special Tools List for Parachute, Cargo Type, 15-ft Diam, Cargo Extraction.* 6 November 1989.

***AFJMAN24-204/TM 38-250 has superseded AFR 71-4/TM 38-250 (15 January 1988). Change 1 reflects this change. The basic manual still references the superseded publication. You may wish to make pen and ink changes to update the old reference citations accordingly.**

****FM 10-500-53/MCRP 4-3.8/TO 13C7-18-41 has superseded FM 10-553/TO 13C7-18-41 (4 December 1981). Change 1 reflects this change. The basic manual still references the superseded publication. You may wish to make pen and ink changes to update the old reference citations accordingly.**

TM 10-1670-279-23&P/ TO 13C5-27-2/ NAVAIR 13-1-28	*Unit and Intermediate DS Maintenance Manual Including Repair Parts and Special Tools List for Parachute, Cargo Type, 22-ft Diam, Cargo Extraction.* 6 November 1989
TM 10-1670-280-23&P/ TO TO 13CS-31-2 NAVAIR 13-1-31	*Unit and Intermediate DS Maintenance Manual Including Repair Parts and Special Tools List for Parachute, Cargo Type, G-11A, G-11B, and G-11C.* 30 August 1989.
AFTO Form 22	*Technical Order Publication Improvement Report*
DA Form 2028	*Recommended Changes to Publication and Blank Forms.* February 1974.
*** Shipper's Declaration for Dangerous Goods**	Locally procured form

*** Shipper's Declaration for Dangerous Goods has superseded DD Form 1387-2 (February 1982.) Change 1 reflects this change. The basic manual still references the superseded publication.You may wish to make pen and ink changes to update the old reference citations accordingly.**

*U.S. GOVERNMENT PRINTING OFFICE: 527-027/60058